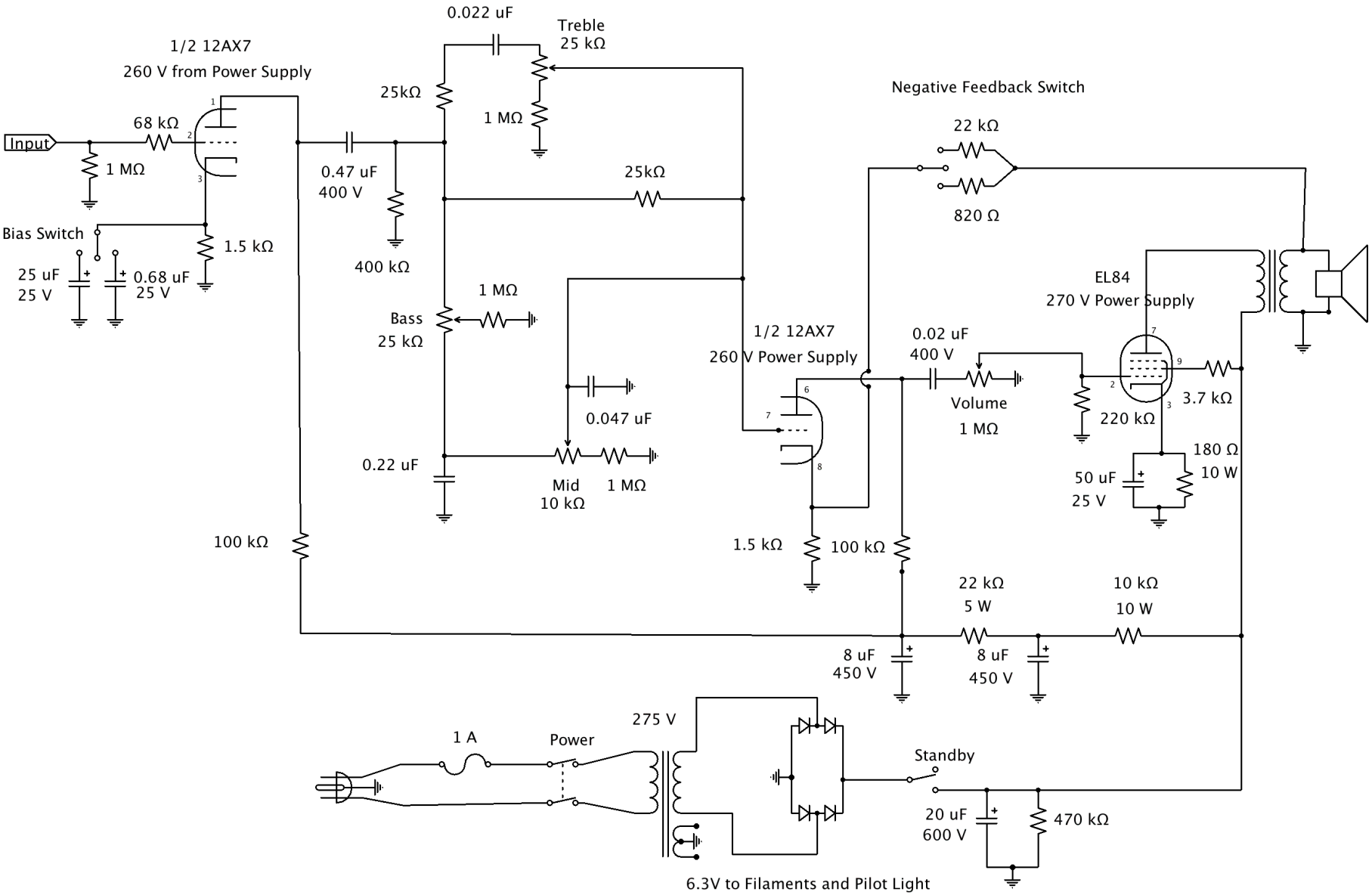

Andrew Bunch		
Bunch Schematic 4.0		
Andrew Bunch	Rev 4.0 2012-06-26	Page 1 / 1