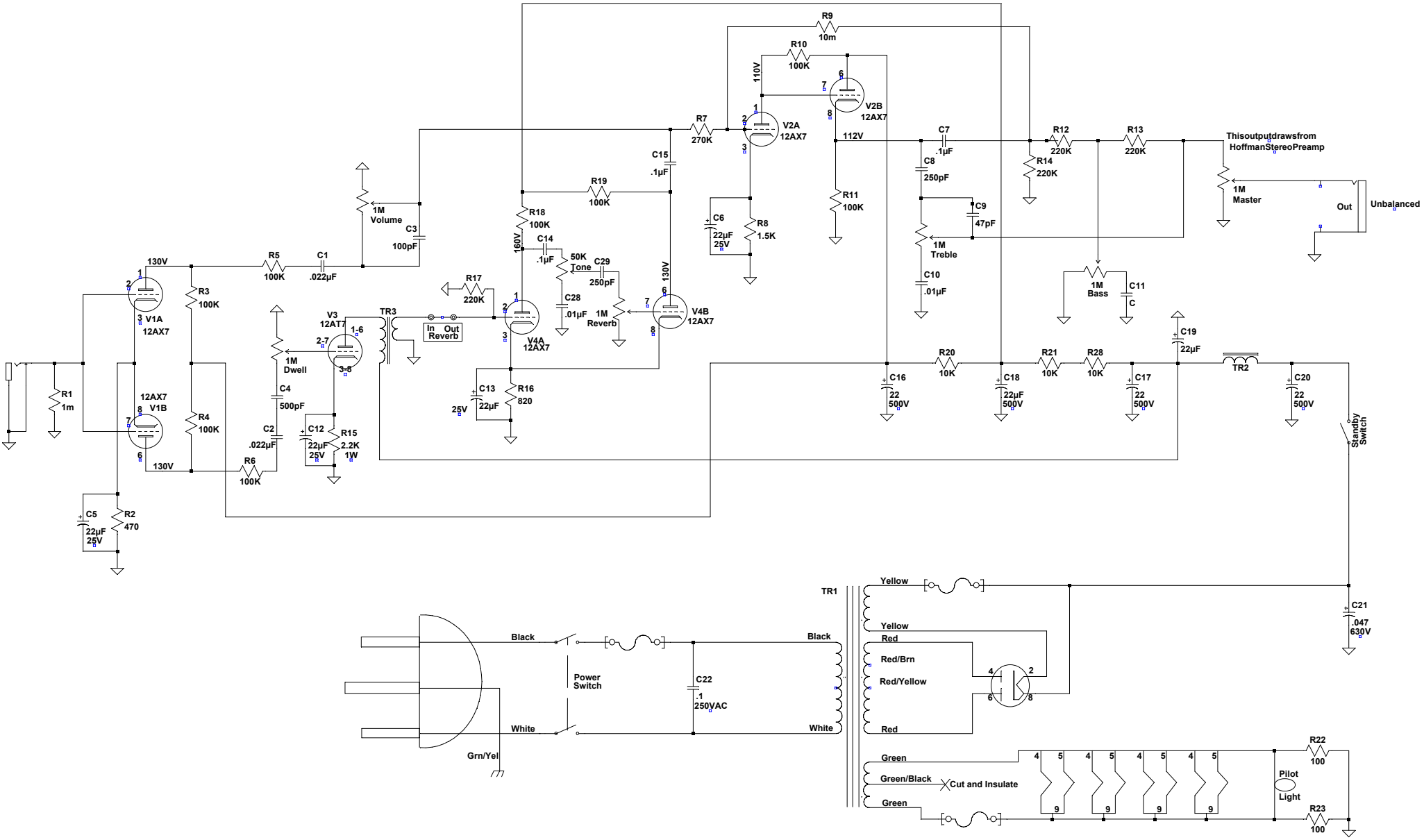

--- C:\Users\Chuck\Documents\Studio\Schematics\Amp Build\BaileyBluesmasterPreAmpv5.asc ---