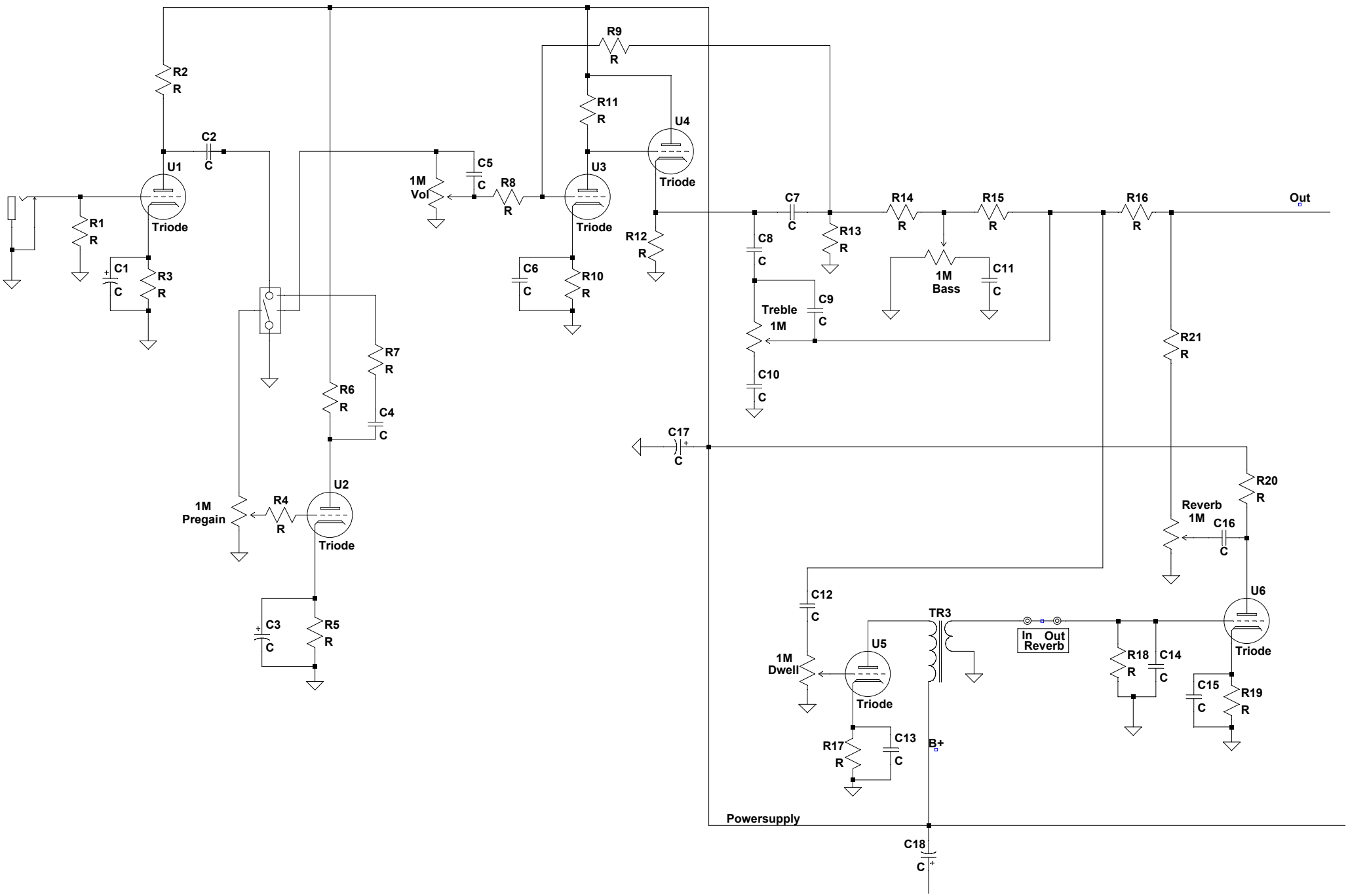

--- C:\Program Files (x86)\LTC\LTspiceIV\BaileyBluesmasterPreAmp.asc ---