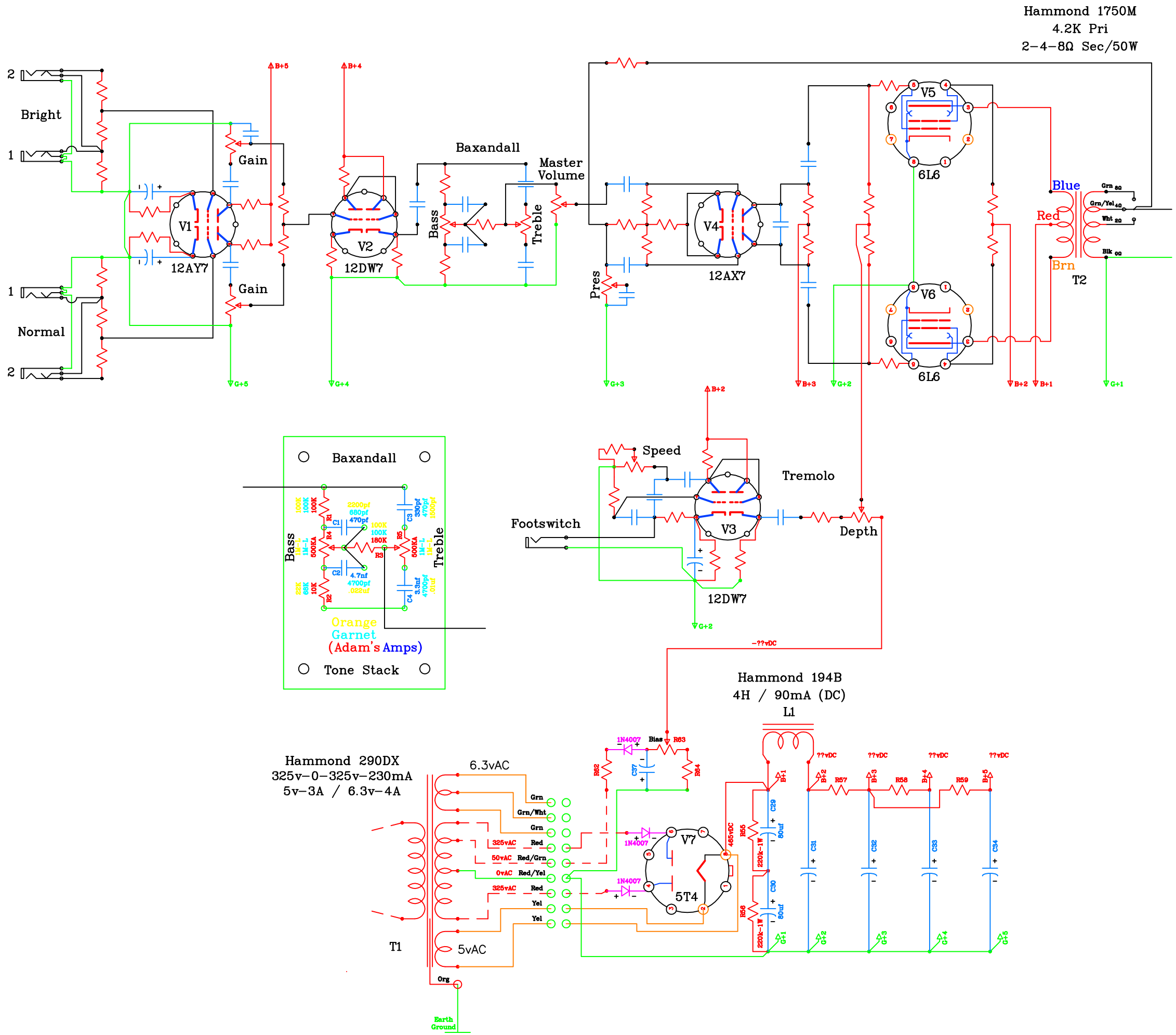
Hammond 1750M
4.2K Pri
2-4-8Ω Sec/50W
Bright
Normal
Gain
Gain
V1
12AY7
V2
12DW7
Baxandall
Bass
Treble
Master Volume
Pres
V4
12AX7
V5
6L6
V6
6L6
Blue
Red
Brn
T2
Baxandall
Bass
Treble
Orange
Garnet
(Adam's Amps)
Tone Stack
Speed
Tremolo
Footswitch
V3
Depth
12DW7
Hammond 194B
4H / 90mA (DC)
L1
Hammond 290DX
325v-0-325v-230mA
5v-3A / 6.3v-4A
6.3vAC
5vAC
T1
V7
5T4
Earth Ground