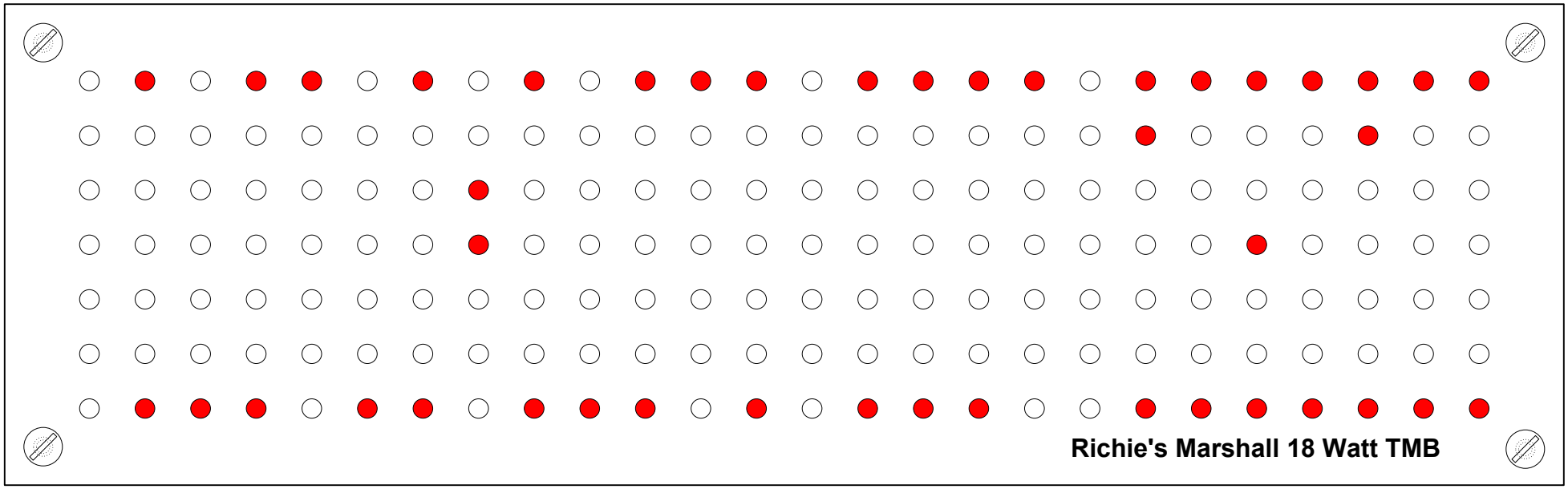
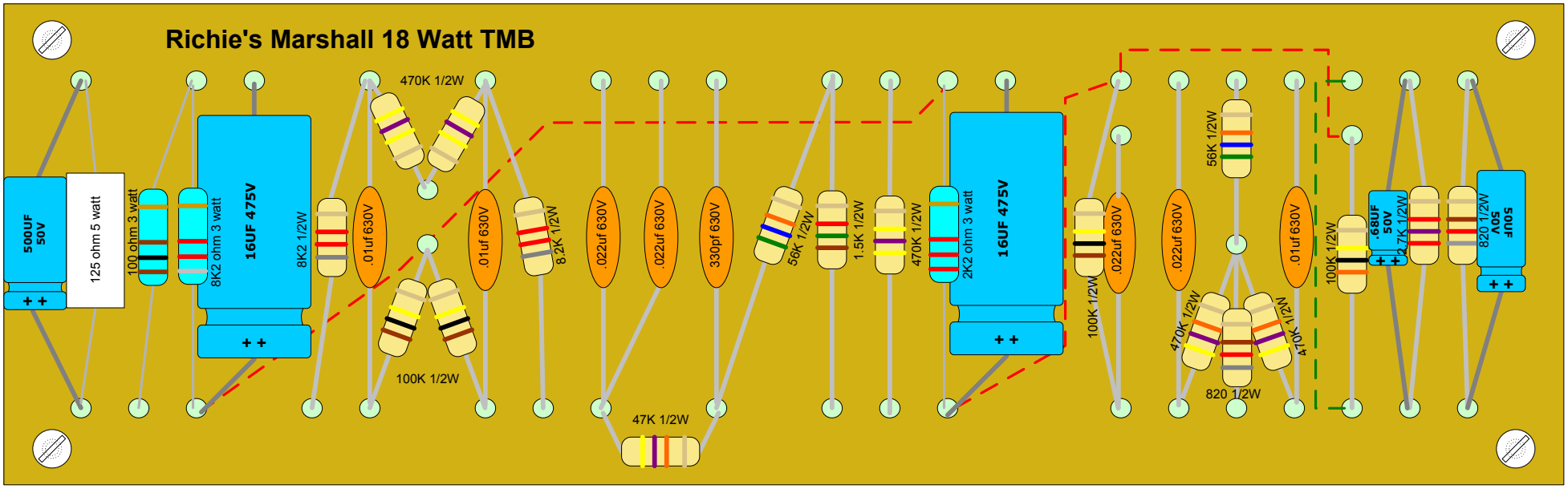
Hole Drilling Guide