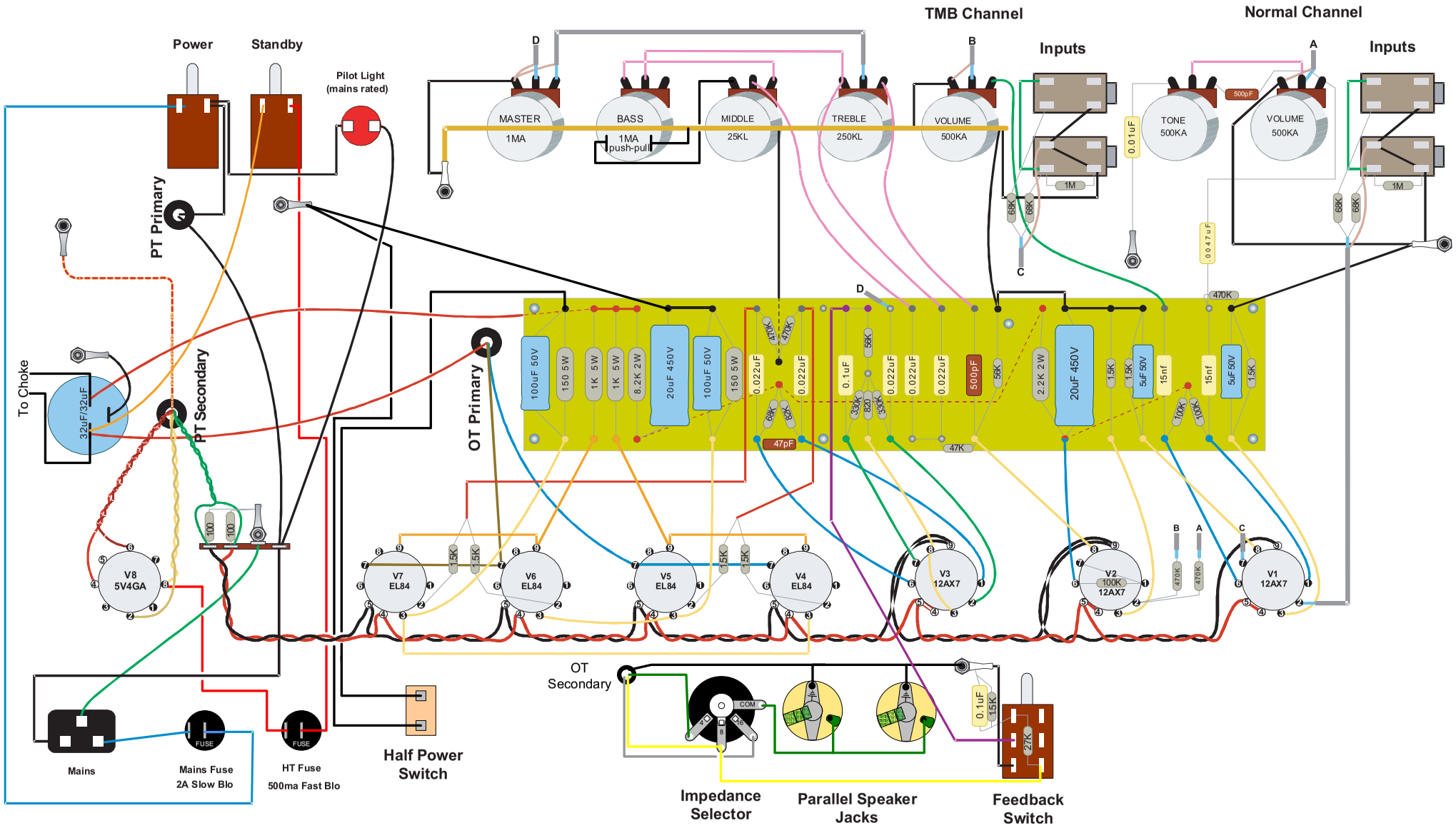
TMB Channel
Normal Channel
Power
Standby
Pilot Light
(mains rated)
Inputs
Inputs
MASTER
1MA
BASS
1MA
push-pull
MIDDLE
25KL
TREBLE
250KL
VOLUME
500KA
TONE
500KA
VOLUME
500KA
PT Primary
PT Secondary
OT Primary
To Choke
32uF/32uF
V8
5V4GA
V7
EL84
V6
EL84
V5
EL84
V4
EL84
V3
12AX7
V2
100K
12AX7
V1
12AX7
Mains
Mains Fuse
2A Slow Blo
HT Fuse
500ma Fast Blo
Half Power
Switch
OT
Secondary
Impedance
Selector
Parallel Speaker
Jacks
Feedback
Switch