36watt TMB

Rev. 5b
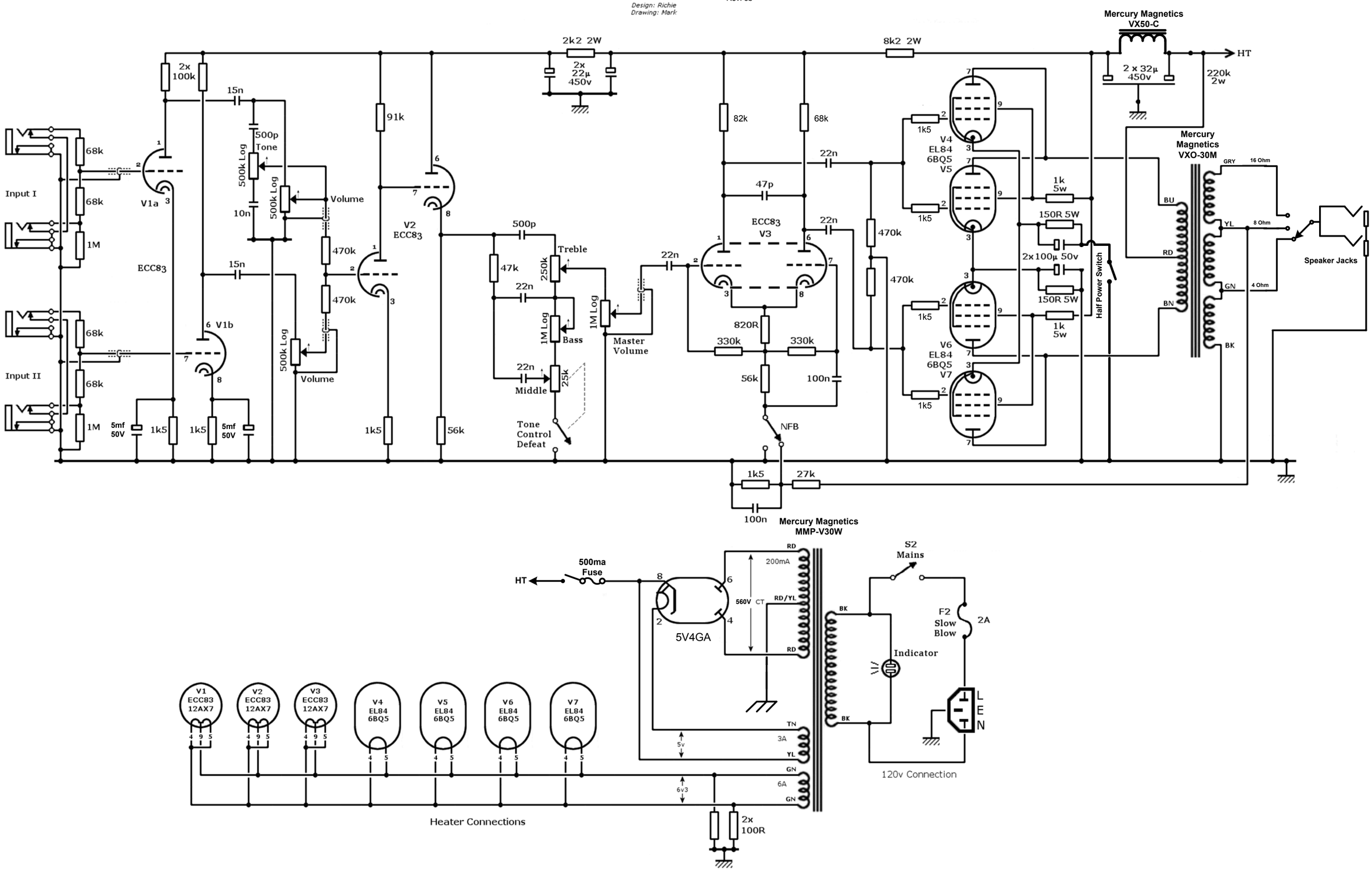
Design: Richie
Drawing: Mark