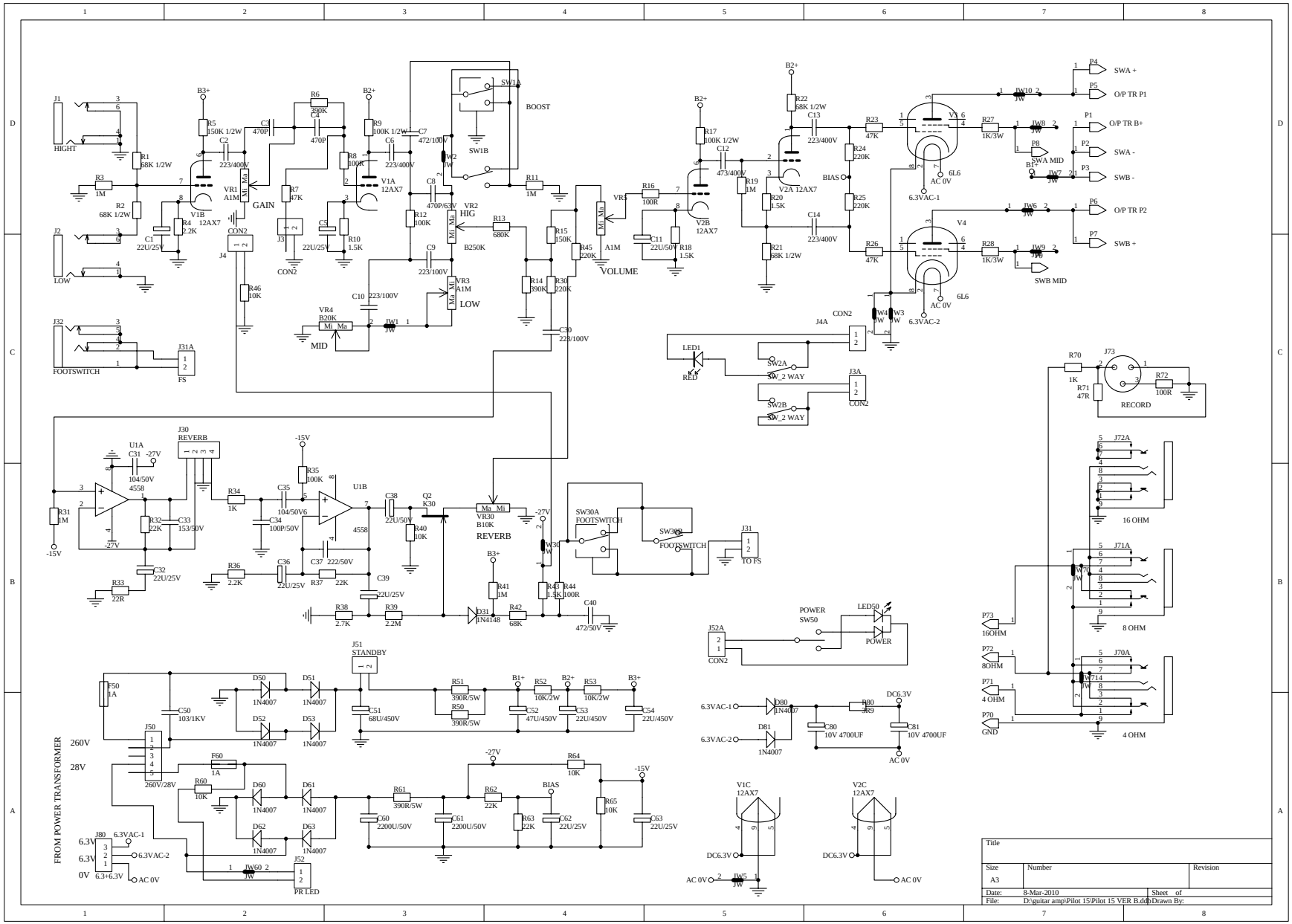
HIGHT
LOW
FOOTSWITCH
GAIN
MID
HIG
LOW
BOOST
VOLUME
REVERB
RECORD
SWA +
O/P TR P1
O/P TR B+
SWA -
SWB -
SWA MID
O/P TR P2
SWB +
SWB MID
16 OHM
8 OHM
4 OHM
TO FS
POWER
FROM POWER TRANSFORMER
PR LED
Title
Size
A3
Number
Revision
Date: 8-Mar-2010
Sheet of
File: D:\guitar amp\Pilot 15\Pilot 15 VER B.ddb
Drawn By: