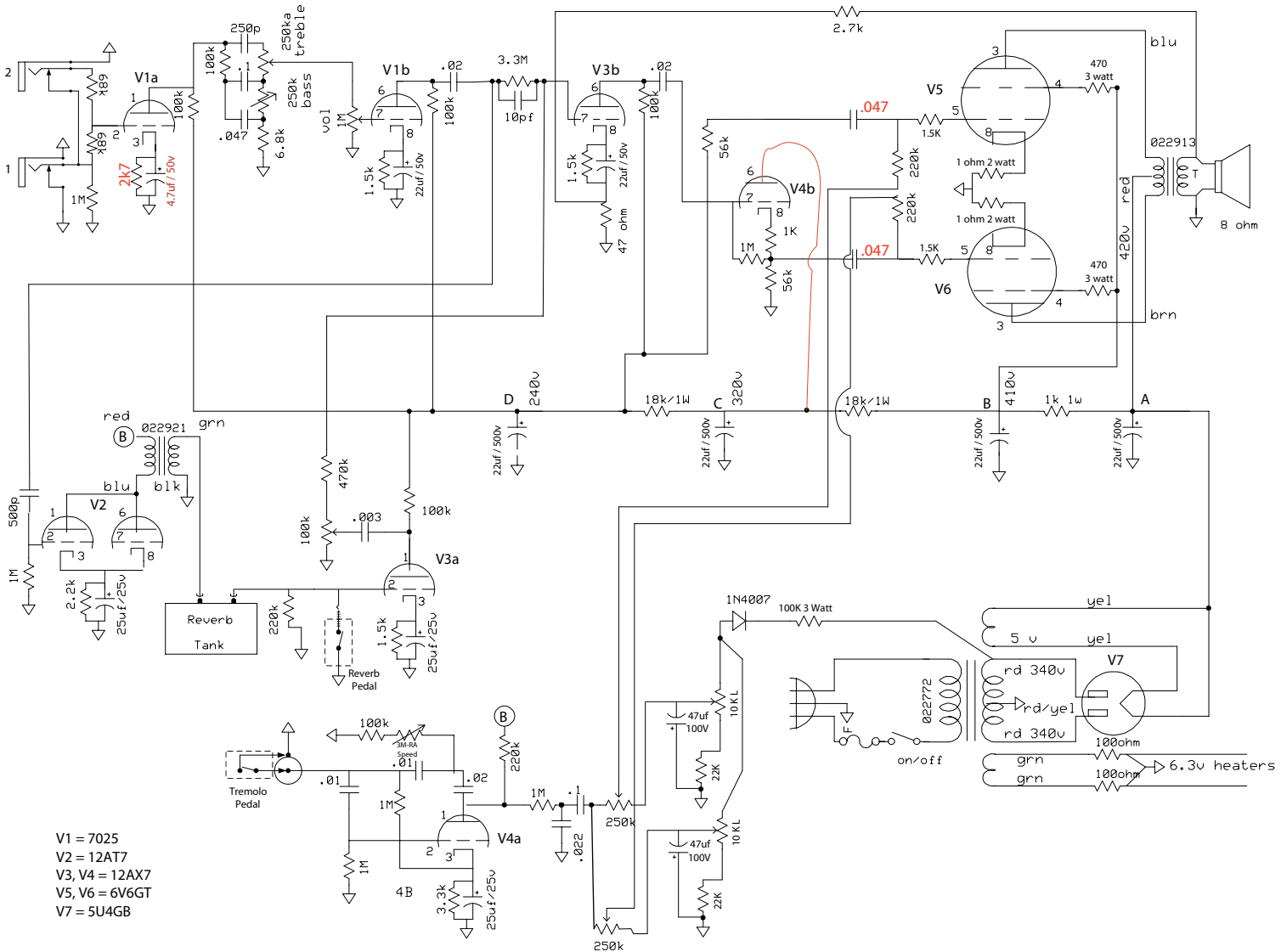
V1a
V1b
V3b
V4b
V5
V6
V2
V3a
V4a
V7
250p
250ka treble
250k bass
100k
.1
.047
6.8k
68k
68k
1M
2k7
4.7uf / 50v
vol 1M
1.5k
22uf / 50v
.02
3.3M
10pf
47 ohm
2.7k
56k
220k
1K
470 3 watt
1.5K
1 ohm 2 watt
blu
brn
red
022913
8 ohm
420v
240v
320v
410v
18k/1W
1k 1w
22uf / 500v
D
C
B
A
red
022921
grn
blu
blk
500p
2.2k
25uf/25v
470k
.003
Reverb Tank
Reverb Pedal
1N4007
100K 3 Watt
yel
5 v
rd 340v
rd/yel
022772
on/off
100ohm
6.3v heaters
47uf 100V
10 KL
22K
Tremolo Pedal
3M-RA Speed
.01
.02
.022
250k
4B
3.3k
V1 = 7025
V2 = 12AT7
V3, V4 = 12AX7
V5, V6 = 6V6GT
V7 = 5U4GB