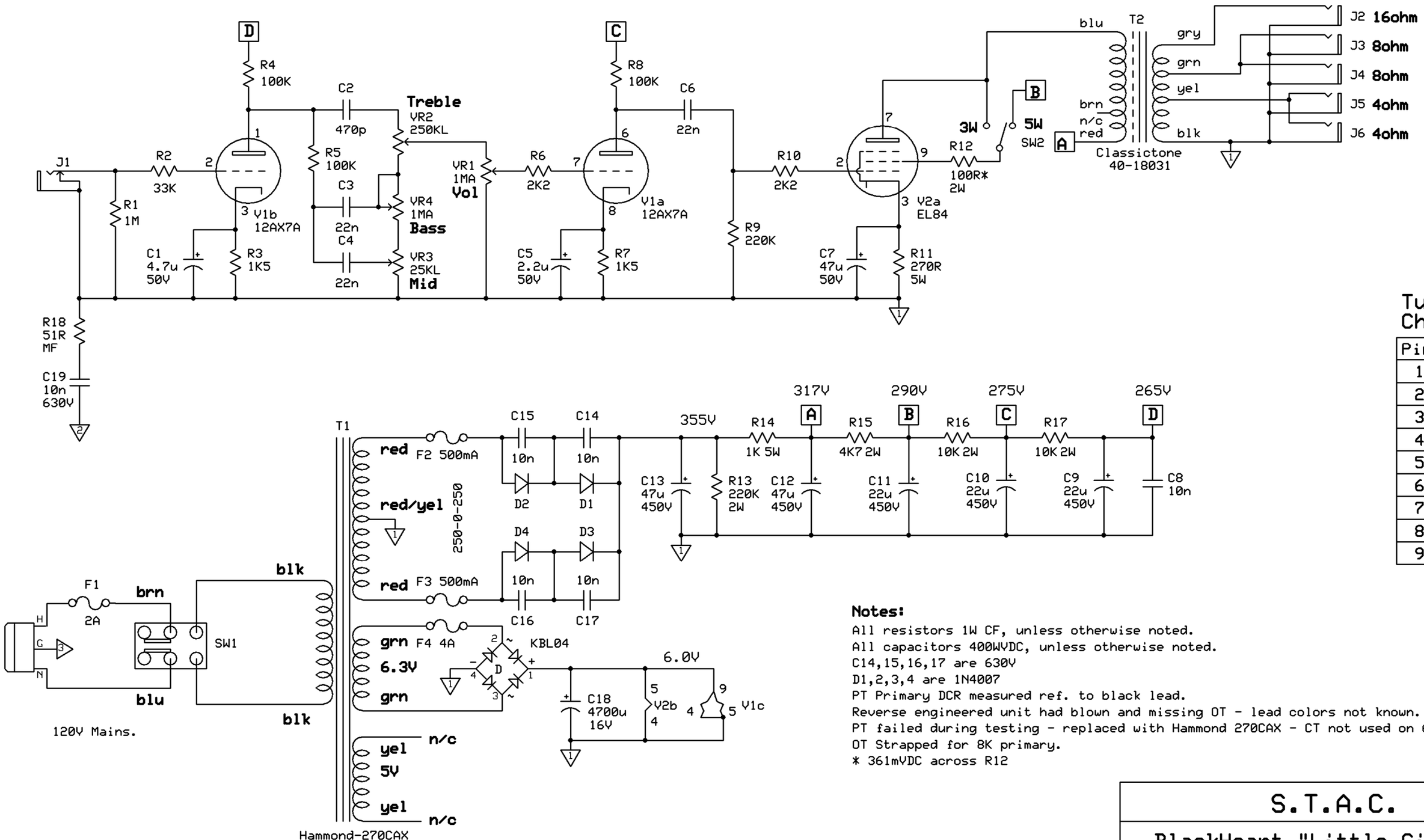

Tube Vol Chart

Pin	V1
1	170
2	g1
3	1.32
4	fil
5	fil
6	175
7	g1
8	1.39
9	fil

Notes:

All resistors 1W CF, unless otherwise noted.
All capacitors 400WVDC, unless otherwise noted.
C14,15,16,17 are 630V
D1,2,3,4 are 1N4007
PT Primary DCR measured ref. to black lead.
Reverse engineered unit had blown and missing OT - lead colors not known.
PT failed during testing - replaced with Hammond 270CAX - CT not used on 6.3V Sec.
OT Strapped for 8K primary.
* 361mVDC across R12

S.T.A.C.

BlackHeart "Little Giant" B

Drawn by:	Rev 1.1
P. Mitcheltree	1/26/2013