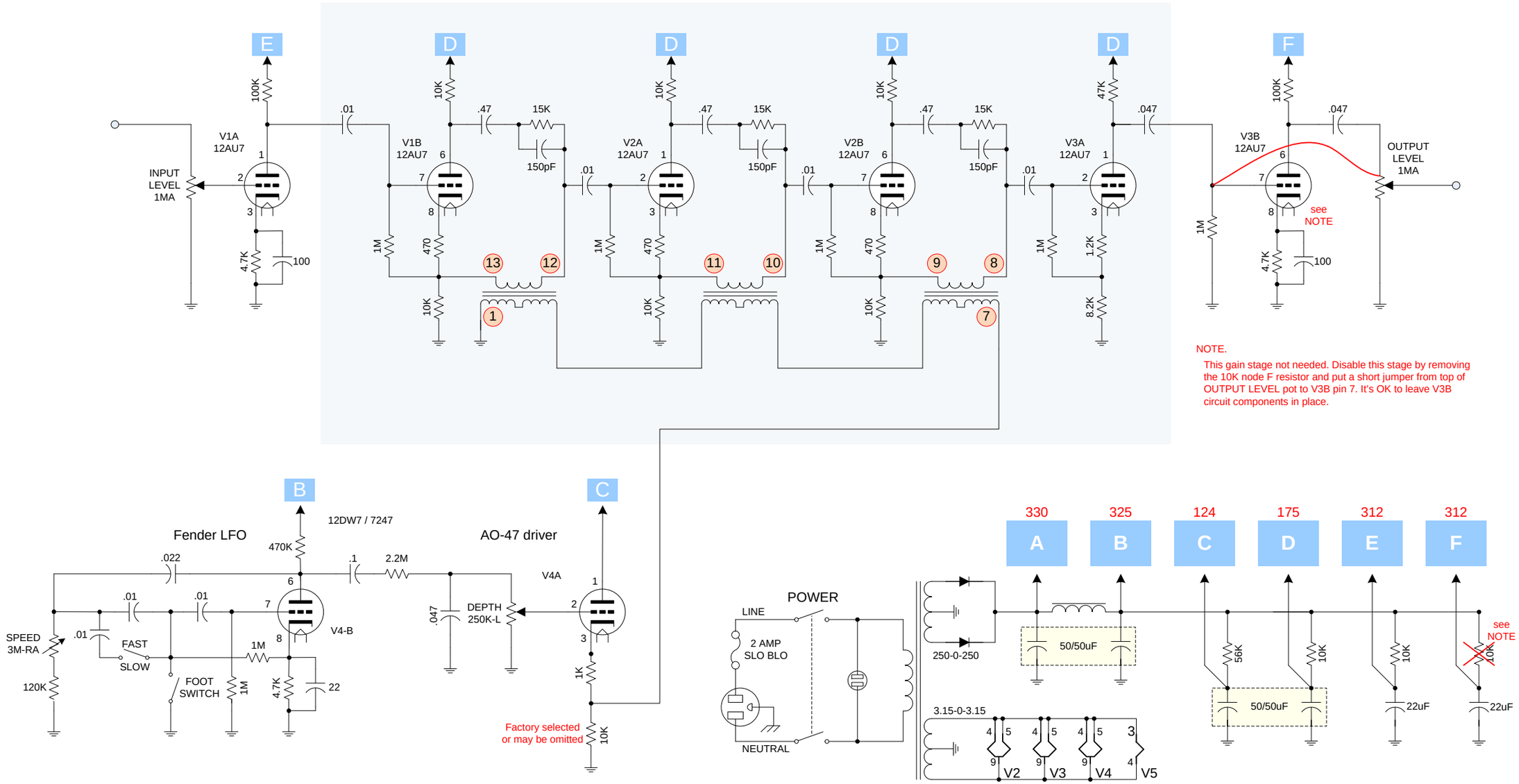
E
D
D
D
F
V1A
12AU7
V1B
12AU7
V2A
12AU7
V2B
12AU7
V3A
12AU7
V3B
12AU7
INPUT
LEVEL
1MA
OUTPUT
LEVEL
1MA
100K
10K
47K
.01
.47
.047
15K
150pF
1M
470
1.2K
8.2K
4.7K
100
see
NOTE
NOTE.
This gain stage not needed. Disable this stage by removing the 10K node F resistor and put a short jumper from top of OUTPUT LEVEL pot to V3B pin 7. It's OK to leave V3B circuit components in place.
B
C
Fender LFO
12DW7 / 7247
AO-47 driver
470K
.022
.1
2.2M
V4A
V4-B
SPEED
3M-RA
FAST
SLOW
FOOT
SWITCH
120K
4.7K
22
.047
DEPTH
250K-L
1K
Factory selected
or may be omitted
POWER
LINE
2 AMP
SLO BLO
NEUTRAL
250-0-250
3.15-0-3.15
50/50uF
56K
22uF
V2
V3
V4
V5
330
325
124
175
312
312
A
B
C
D
E
F

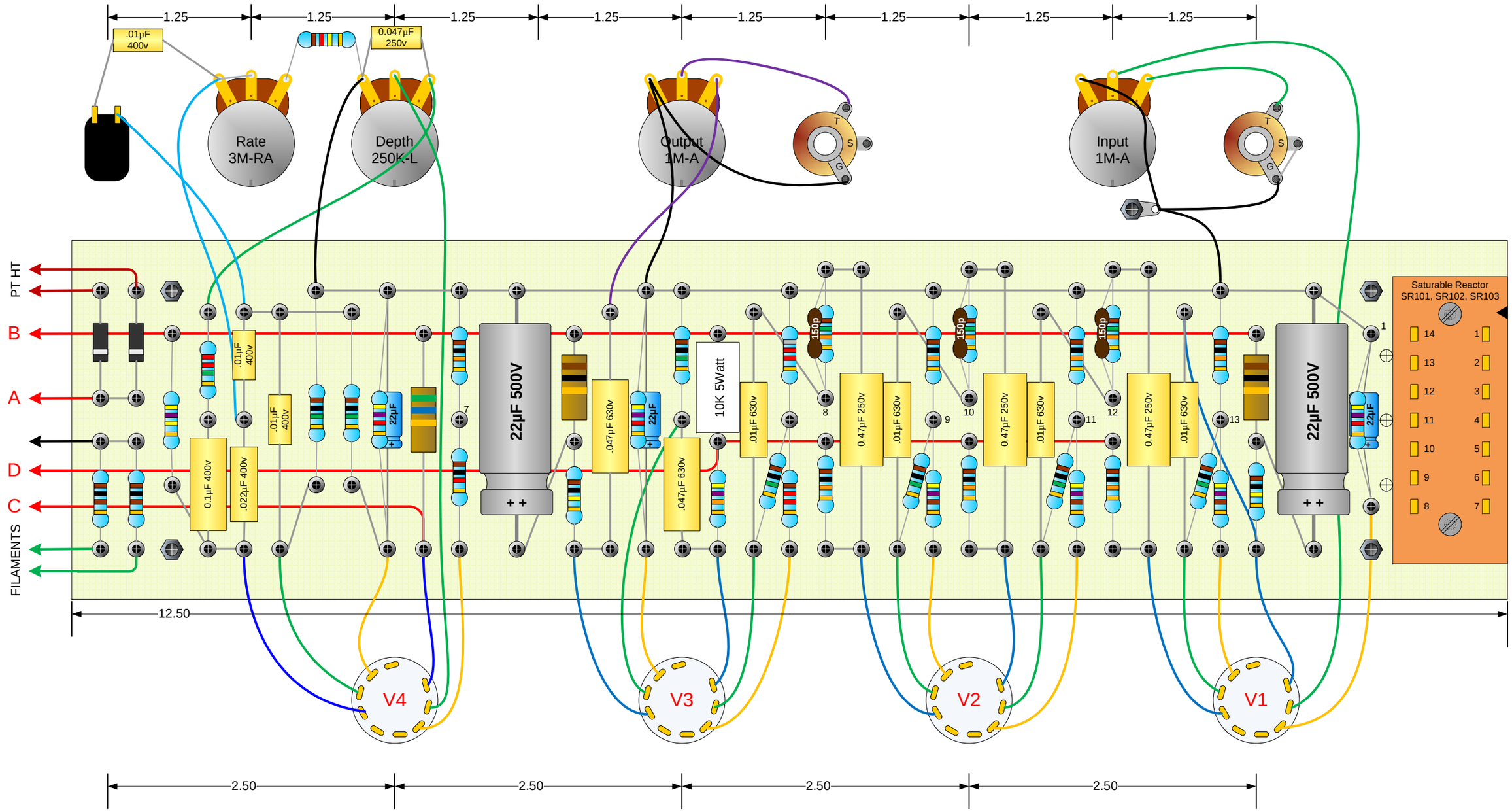
1.25
.01µF 400v
0.047µF 250v
Rate 3M-RA
Depth 250K-L
Output 1M-A
Input 1M-A
T
S
G
PT HT
B
A
D
C
FILAMENTS
.01µF 400v
0.1µF 400v
.022µF 400v
22µF
22µF 500V
.047µF 630v
10K 5Watt
.01µF 630v
150p
0.47µF 250v
Saturable Reactor
SR101, SR102, SR103
14
13
12
11
10
9
8
1
2
3
4
5
6
7
12.50
V4
V3
V2
V1
2.50

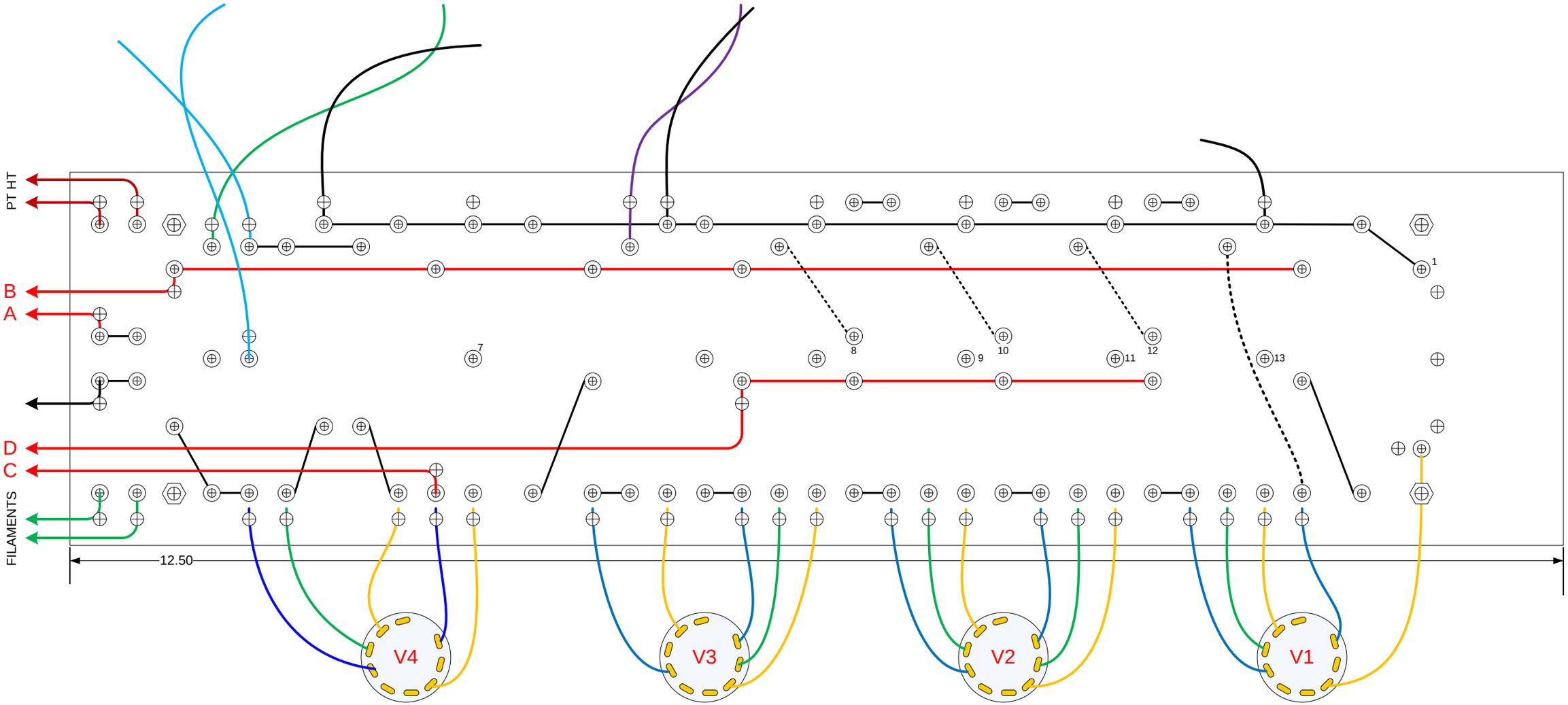
PT HT
B
A
D
C
FILAMENTS
1
7
8
9
10
11
12
13
12.50
V4
V3
V2
V1