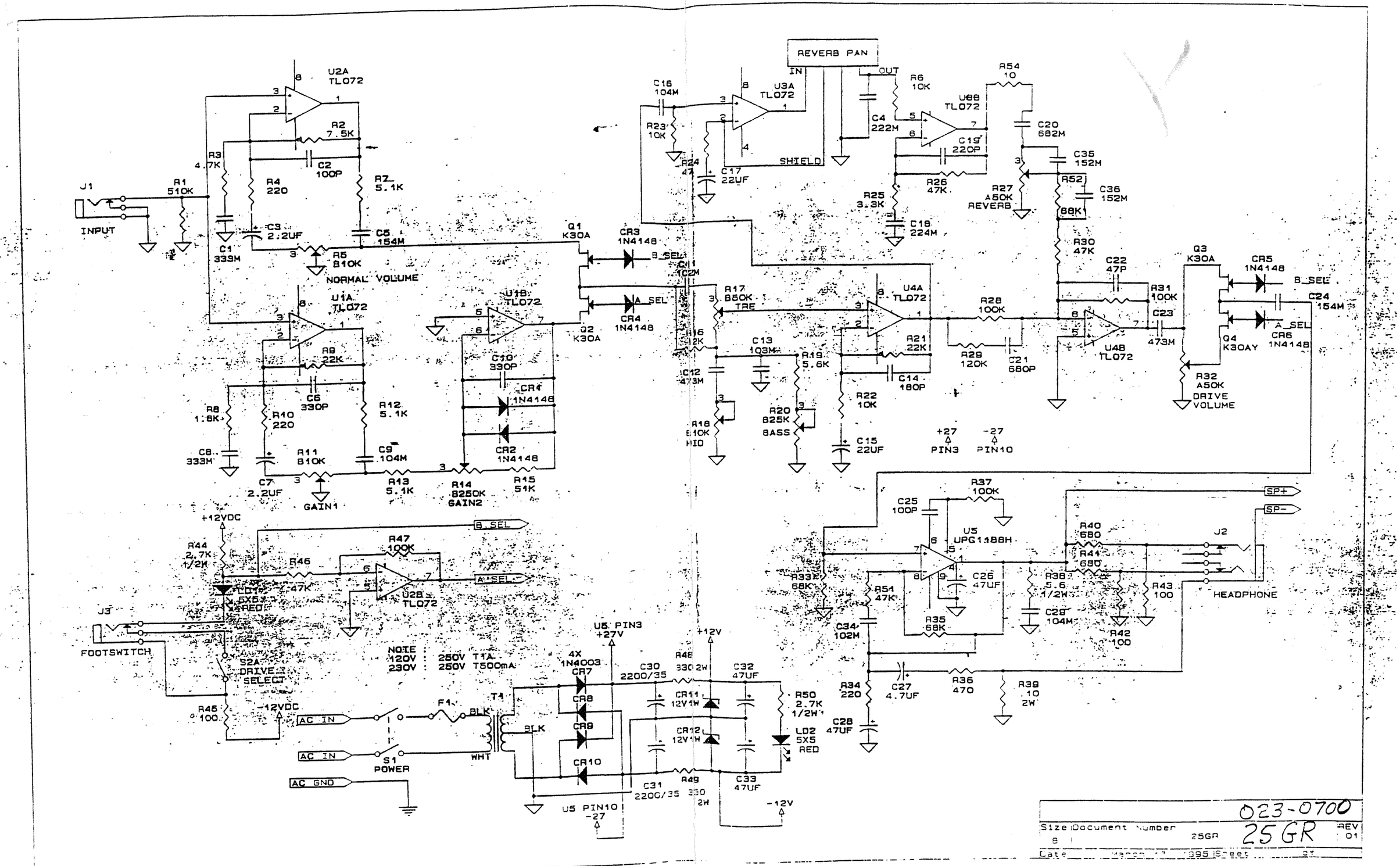

016795 TL072 U1, U2, U3, U4
024012 μPC1188H U5