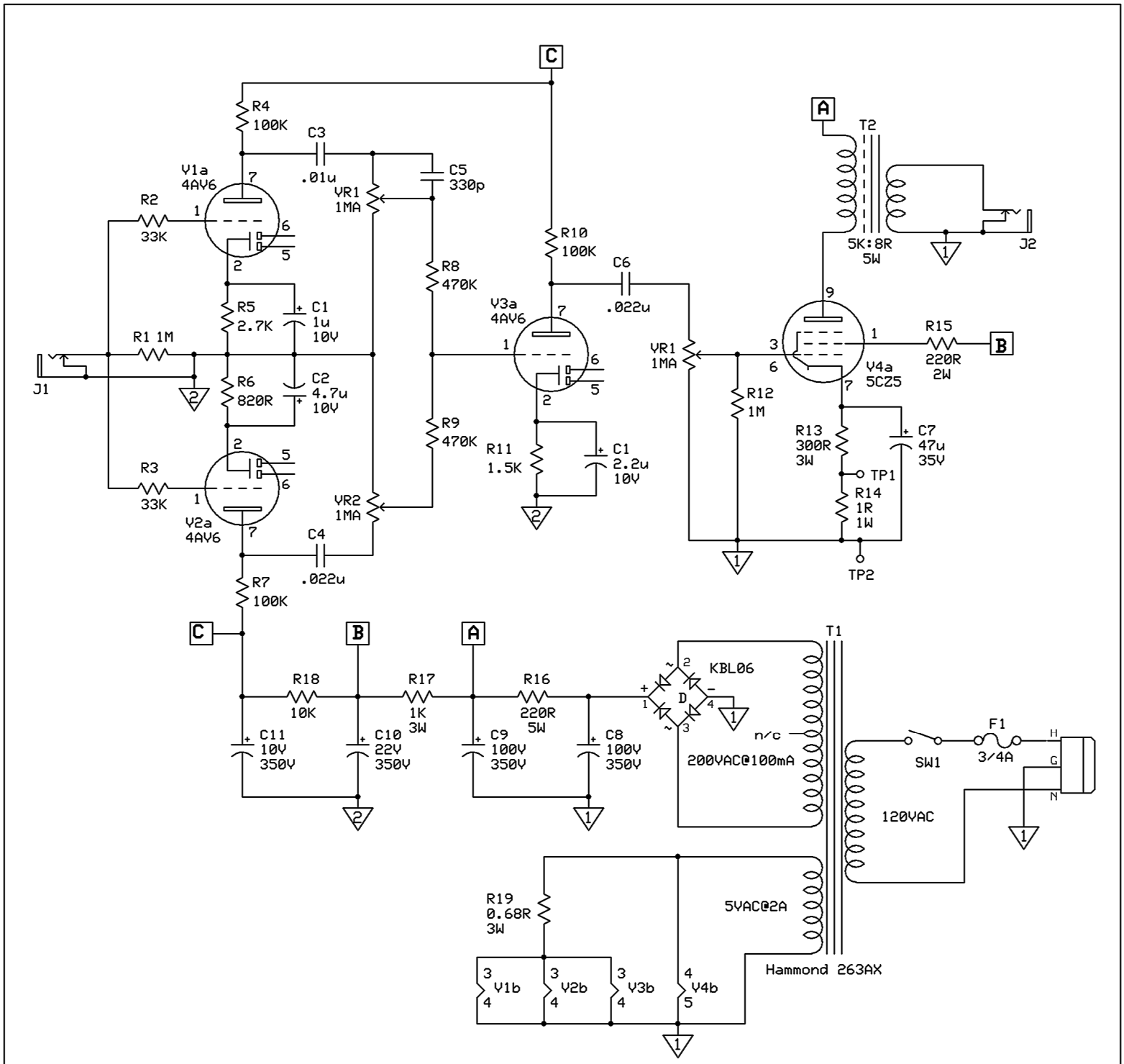

Valve Voltage Chart

Pin	V1	V2	V3	V4
1	g1	g1	g1	33.4
2				n/c
3	fil	fil	fil	g1
4	fil	fil	fil	fil
5	n/c	n/c	n/c	fil
6	n/c	n/c	n/c	g1
7				
8	n/a	n/a	n/a	n/c
9	n/a	n/a	n/a	

All coupling capacitors are 400WVDC unless otherwise noted.
All resistors 1W CF unless otherwise noted.

S.T.A.C.		
Stapper Stomper		
P. Mitcheltree	Rev 1.0 7/23/2013	No Scale