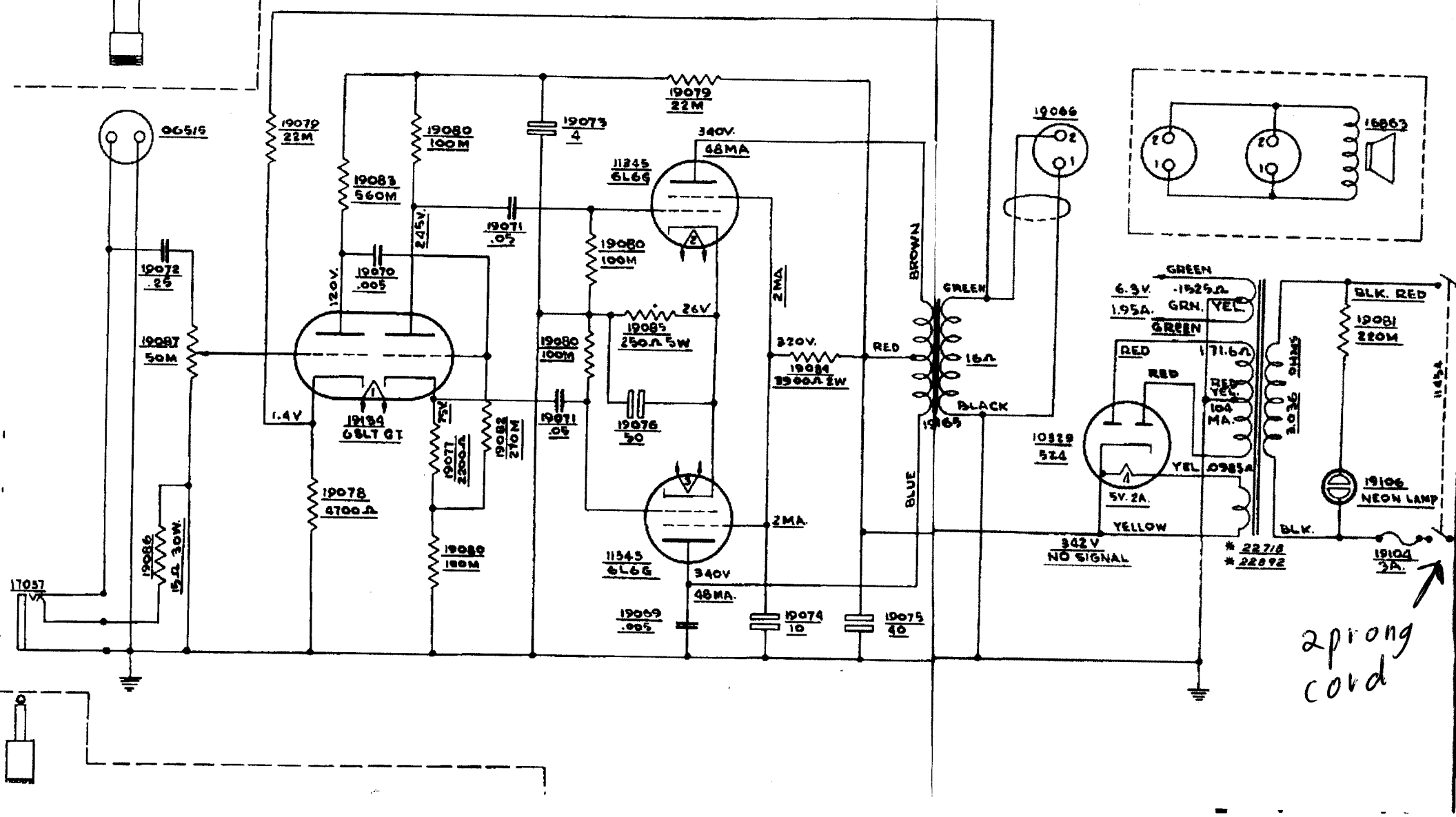
06515
19079
22M
19080
100M
19083
560M
19073
4
19079
22M
340V.
48MA
11245
6L6G
19071
.05
245V.
19072
.25
19070
.005
120V.
19080
100M
26V
19085
250Ω 5W
19087
50M
19080
100M
19076
50
19071
.05
1.4V
19139
6SLT GT
25V
19077
2200Ω
19082
210M
19078
4700Ω
19080
100M
11545
6L6G
340V
48MA.
2MA.
19069
.005
19074
10
19075
40
17057
19086
15Ω 30W.
320V.
19084
3900Ω 2W
RED
BROWN
GREEN
16Ω
BLACK
19065
BLUE
19066
10329
5Z4
5V. 2A.
342V
NO SIGNAL
YELLOW
GREEN
6.3V.
1.95A.
.1525Ω
GRN.
YEL.
GREEN
RED
171.6Ω
RED
RED
YEL.
104
MA.
YEL.
.0985Ω
3036
* 22718
* 22892
BLK. RED
19081
220M
19106
NEON LAMP
BLK.
19104
3A.
11454
16863
2prong
cord