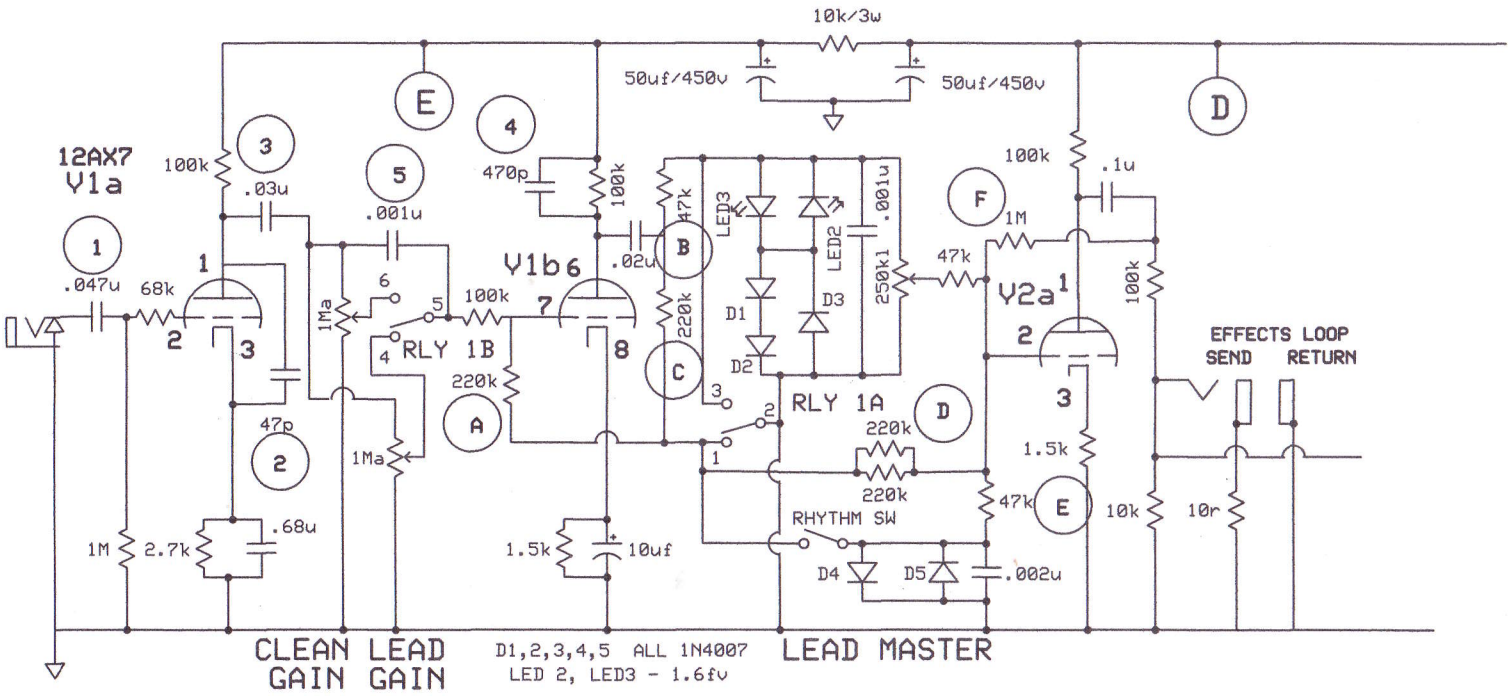

Company Name		
Schematic Name		
Designer's name	Rev 1.0 26/01/2014	Page # or name

C:\Users\Tim Hickey\Documents\Downloads\Downloads\Schem Files\2550x Trouble Shoot.sch - Sheet1