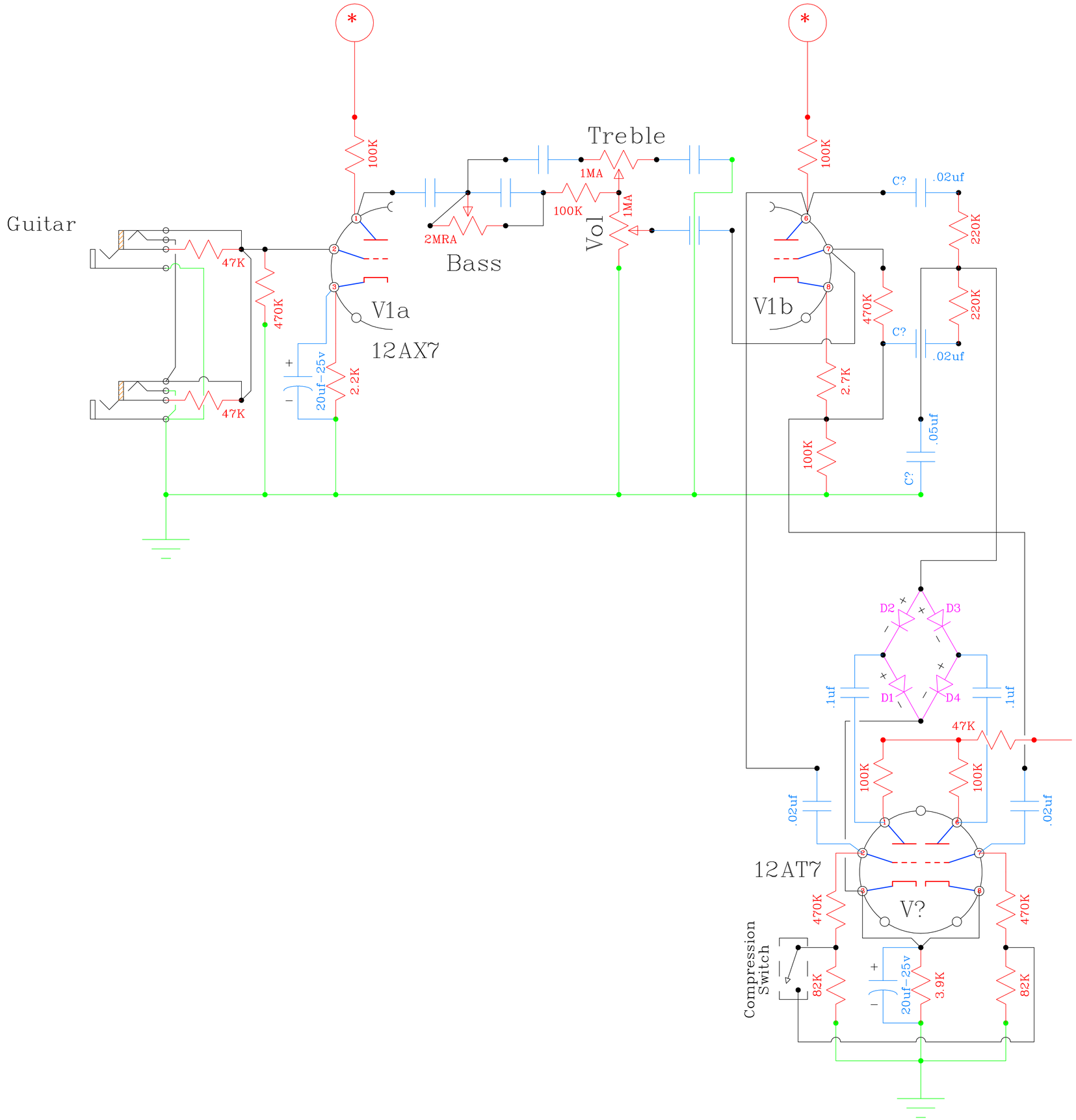
Guitar
47K
47K
470K
100K
V1a
12AX7
20uf-25v
2.2K
2MRA
Bass
100K
1MA
Treble
1MA
Vol
100K
V1b
C?
.02uf
220K
470K
220K
C?
.02uf
2.7K
100K
.05uf
C?
D2
D3
D1
D4
.1uf
.1uf
47K
100K
100K
.02uf
.02uf
12AT7
V?
470K
470K
Compression Switch
82K
20uf-25v
3.9K
82K