Silvertone 1484 Reverb

The **Silvertone 1484** is a cool little amp (**gut shot (http://www.dougcircuits.com/images/silvertone1484wideguts.jpg)**). There are a couple of weak spots in the amp, and the reverb is probably at the top of the list. The reverb circuit used an odd little piezo reverb box *(Roebuck probably couldn't justify the expense of a real Hammond tank).* They were heavily prone to failure, not to mention they didn't sound good to begin with. Below is the circuit for the 1484 reverb, redrawn for clarity and isolate it from the rest of the 1484 circuit. Notice how similar it to the higher quality

Magnatone M13 circuit above.

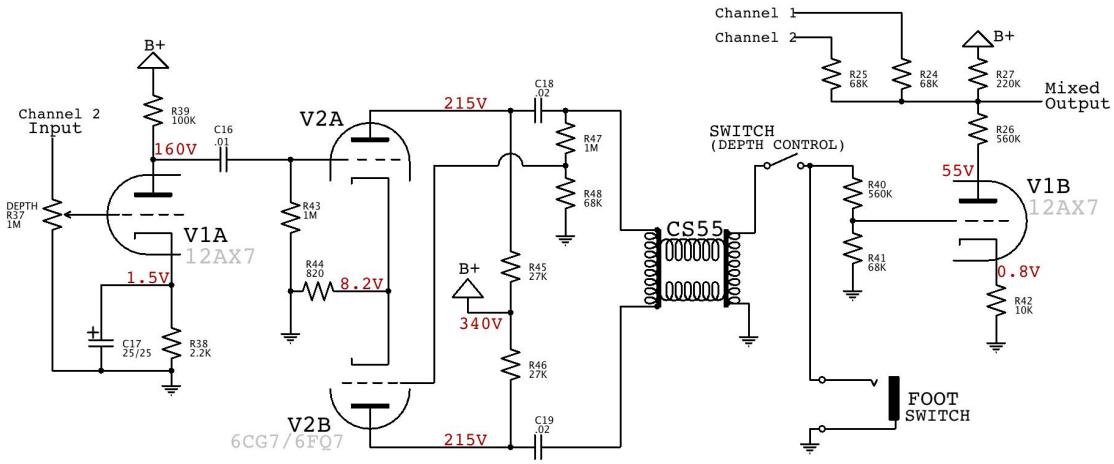

Silvertone 1484 Reverb Circuit
185.11040

(1484reverborig.jpg)

Before we get into the reverb circuit too deep, here are some trouble shooting tips that might fix a broken reverb circuit:

1484 reverb troubleshooting:

Silvertone used undersized plate resistors on the 6CG7. 125V across a 27KΩ resistor is .58WATTS, and Silvertone used 1/2 WATT resistors. If the voltage at the plate of the 6CG7 is close to 320-340V instead of 215V, the resistor has failed. Similarly, this can also be an indication that the tube has failed.

The major difference between the M13 and the 1484 circuit is that the Silvertone "Tank" takes a push pull signal from a phase inverter that the 6CG7 (V2)

provides in para-phase arrangement. The 6CG7 is a

Can this circuit be easily modified to accept a common Hammond style tank?

If we remove the voltage divider (R47 & R48), and instead let V2B's grid be tied to V2A's grid, both triodes will produce a signal in the same phase as the each other (instead of inverted). We can then tie the two signals together at the tank inside of the coupling caps, and send that signal to the tank.

The **current** produced should be reasonably strong. This parallel arrangement of triodes is similar the M13's paralleled 12AU7, and the plate resistors are load enough that it should produce a strong current to drive the tank.

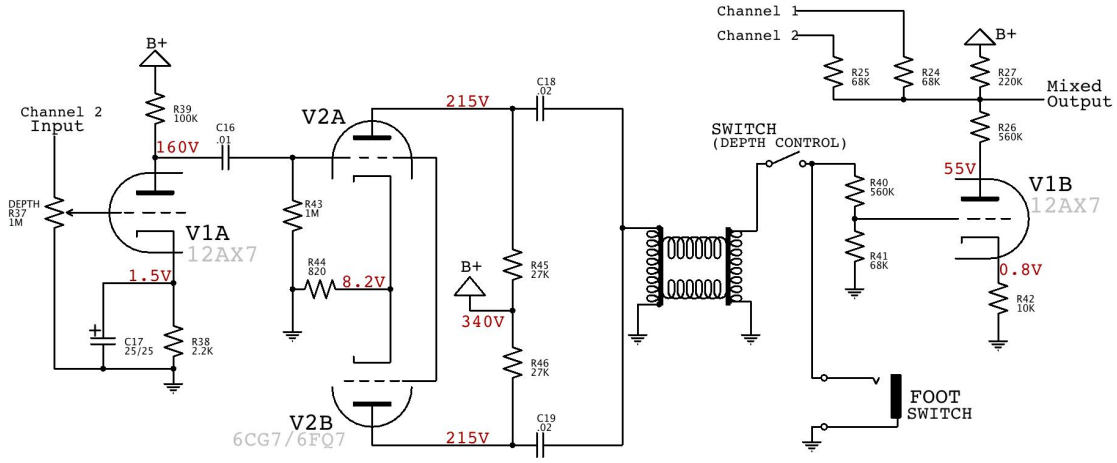

Silvertone 1484 Reverb Circuit
185.11040 MODIFIED

(1484reverbmod.jpg)

The amperage draw does not change for the pair of triodes, so it'll have no effect on the power supply.

R40's 560K will need to be reduced (or eliminated). R26's 560K values might need to be tweaked to get the wet/dry mix right. Otherwsie, I think this would work!