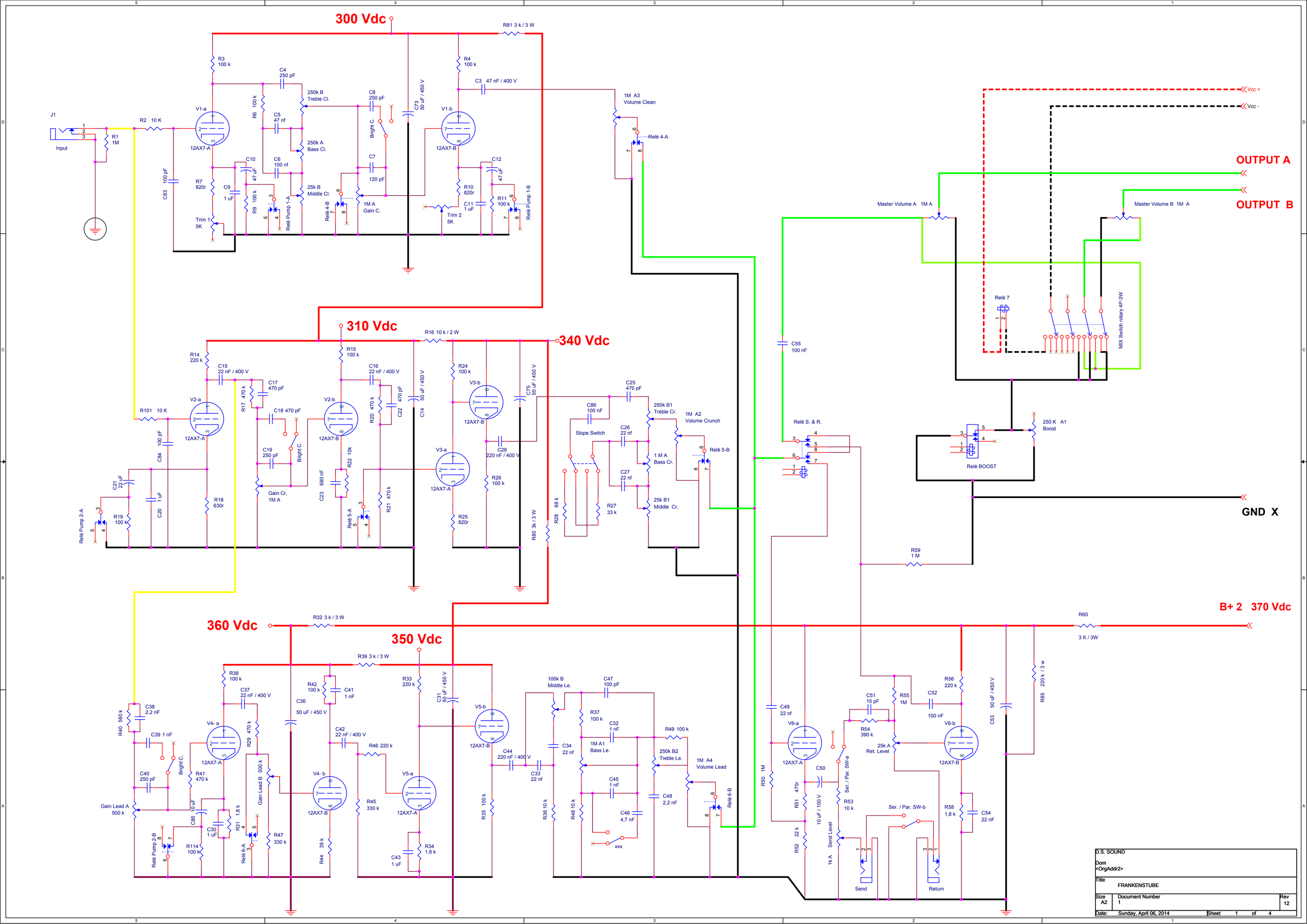
300 Vdc
310 Vdc
340 Vdc
360 Vdc
350 Vdc
B+ 2 370 Vdc
OUTPUT A
OUTPUT B
GND X
Vcc +
Vcc -
J1
Input
R1 1M
R2 10 K
R3 100 k
R4 100 k
R81 3 k / 3 W
C4 250 pF
C5 47 nf
C6 100 nf
C8 250 pF
C7 120 pF
C3 47 nF / 400 V
C73 50 uF / 450 V
V1-a
12AX7-A
V1-b
12AX7-B
250k B Treble Cl.
250k A Bass Cl.
25k B Middle Cl.
Bright C.
1M A Gain C.
1M A3 Volume Clean
Relè 4-A
Relè 4-B
Relè Pump 1-A
Relè Pump 1-B
Trim 1 5K
Trim 2 5K
C83 100 pF
R7 820r
C9 1 uF
C10 47 uF
R9 100 k
R10 820r
C11 1 uF
C12 47 uF
R11 100 k
R14 220 k
C15 22 nF / 400 V
C17 470 pF
R17 470 k
R101 10 K
V2-a
12AX7-A
C18 470 pF
C19 250 pF
Gain Cr. 1M A
C84 100 pF
C21 22 uF
C20 1 uF
R18 630r
R19 100 k
Relè Pump 2-A
R15 100 k
C16 22 nF / 400 V
V2-b
12AX7-B
R20 470 k
C22 470 pF
R22 10k
C23 680 nF
R21 470 k
Relè 5-A
C14 50 uF / 450 V
R16 10 k / 2 W
R24 100 k
V3-b
12AX7-B
C75 50 uF / 450 V
C28 220 nF / 400 V
R26 100 k
V3-a
12AX7-A
R25 820r
R60 3k / 3 W
C25 470 pF
250k B1 Treble Cr.
1M A2 Volume Crunch
C86 100 nF
Slope Switch
C26 22 nf
1 M A Bass Cr.
C27 22 nf
25k B1 Middle Cr.
R28 68 k
R27 33 k
Relè 5-B
C55 100 nF
Relè S. & R.
Master Volume A 1M A
Master Volume B 1M A
Relè 7
MIX Switch rotary 4P-3W
250 K A1 Boost
Relè BOOST
R59 1 M
R32 3 k / 3 W
R39 3 k / 3 W
R60 3 K / 3W
R38 100 k
C37 22 nF / 400 V
R29 470 k
V4- a
12AX7-A
R40 560 k
C38 2,2 nF
C39 1 nF
C40 250 pF
Bright C.
R41 470 k
Gain Lead A 500 k
C85 10 uF
C30 1 uF
R31 1,8 k
Gain Lead B 500 k
R47 330 k
Relè 6-A
Relè Pump 2-B
R114 100 k
R42 100 k
C41 1 nF
C36 50 uF / 450 V
C42 22 nF / 400 V
V4- b
12AX7-B
R44 39 k
R46 220 k
R45 330 k
V5-a
12AX7-A
C43 1 uF
R34 1,8 k
R33 220 k
C31 50 uF / 450 V
V5-b
12AX7-B
R35 100 k
C44 220 nF / 400 V
C33 22 nf
100k B Middle Le.
C47 100 pF
R37 100 k
C32 1 nF
1M A1 Bass Le.
C34 22 nf
C45 1 nF
C46 4,7 nF
R36 10 k
R48 10 k
xxx
R49 100 k
250k B2 Treble Le.
C48 2,2 nF
1M A4 Volume Lead
Relè 6-B
C49 22 nf
V6-a
12AX7-A
R50 1M
R51 470r
C50
10 uF / 100 V
R52 22 k
Send Level
1k A
Ser. / Par. SW-a
R53 10 k
Send
C51 15 pF
R54 390 k
R55 1M
C52 100 nF
R56 220 k
25k A Ret. Level
V6-b
12AX7-B
Ser. / Par. SW-b
R58 1,8 k
C54 22 nf
Return
C53 50 uF / 450 V
R85 220 k / 3 w
D.S. SOUND
Dom
<OrgAddr2>
Title
FRANKENSTUBE
Size A2
Document Number 1
Rev 12
Date: Sunday, April 06, 2014
Sheet 1 of 4