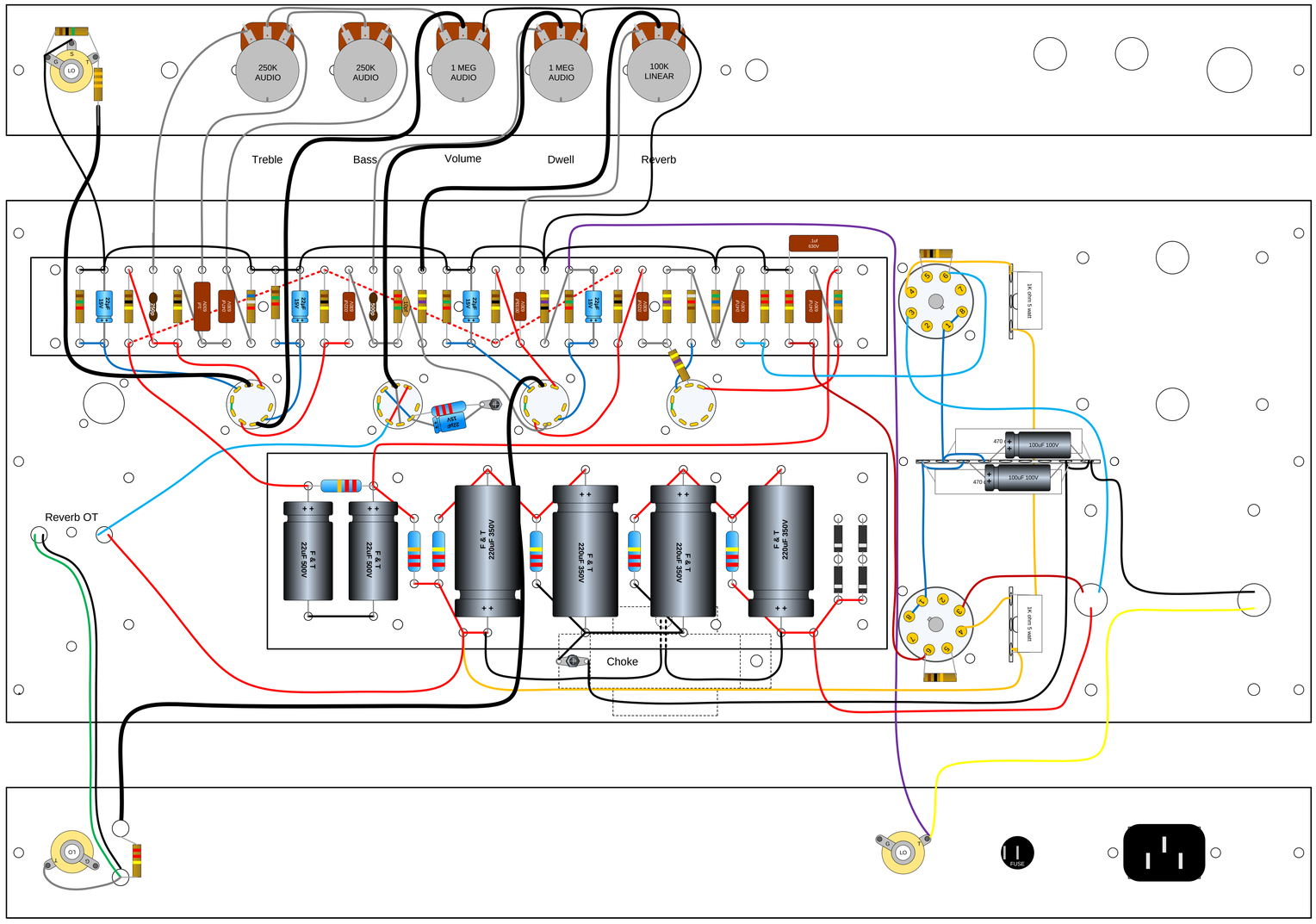
250K AUDIO
250K AUDIO
1 MEG AUDIO
1 MEG AUDIO
100K LINEAR
Treble
Bass
Volume
Dwell
Reverb
Reverb OT
F & T 22uF 500V
F & T 22uF 500V
F & T 220uF 350V
F & T 220uF 350V
F & T 220uF 350V
F & T 220uF 350V
Choke
100uF 100V
100uF 100V
470
470
1K ohm 5 watt
1K ohm 5 watt
FUSE

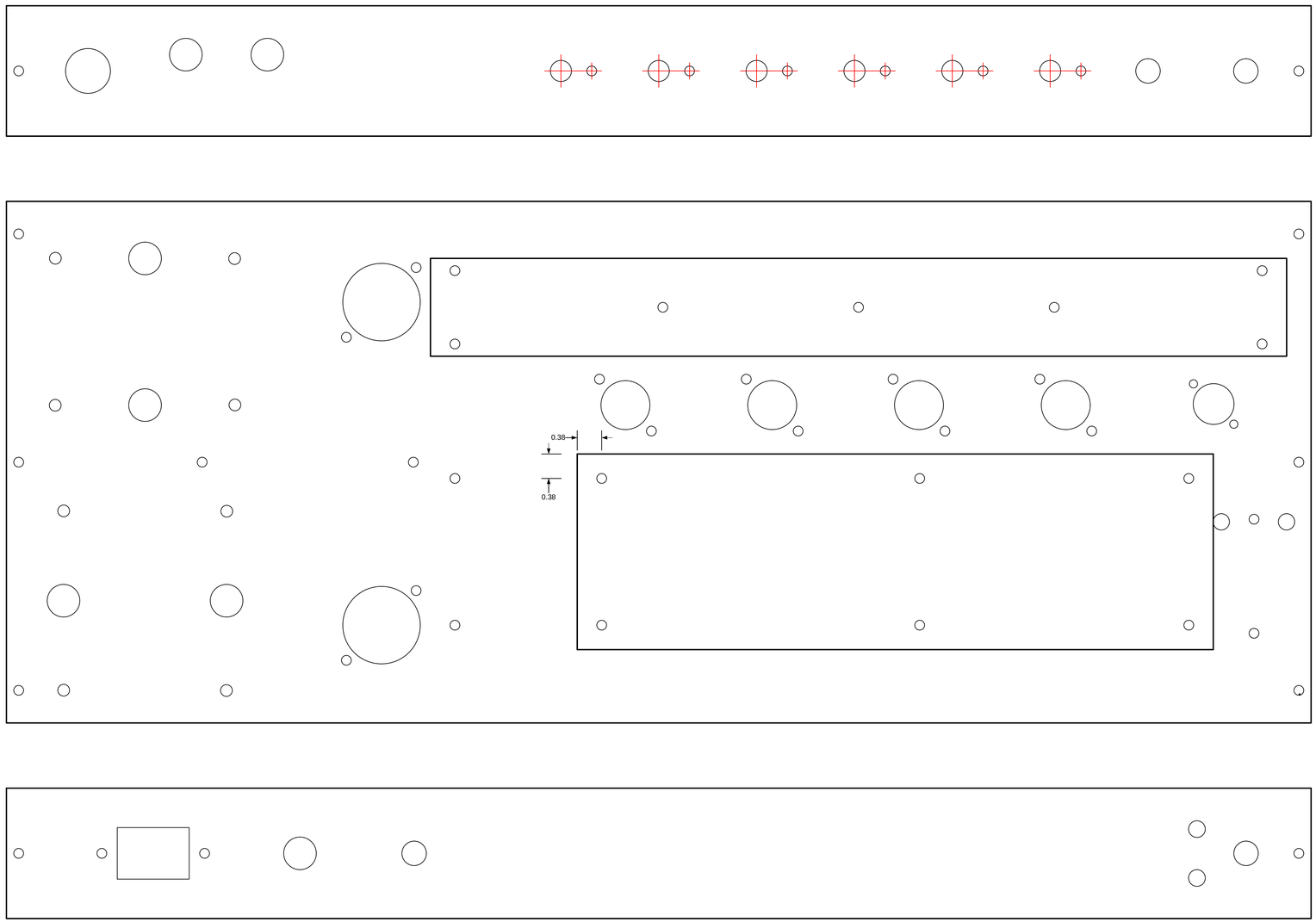
0.38
0.38