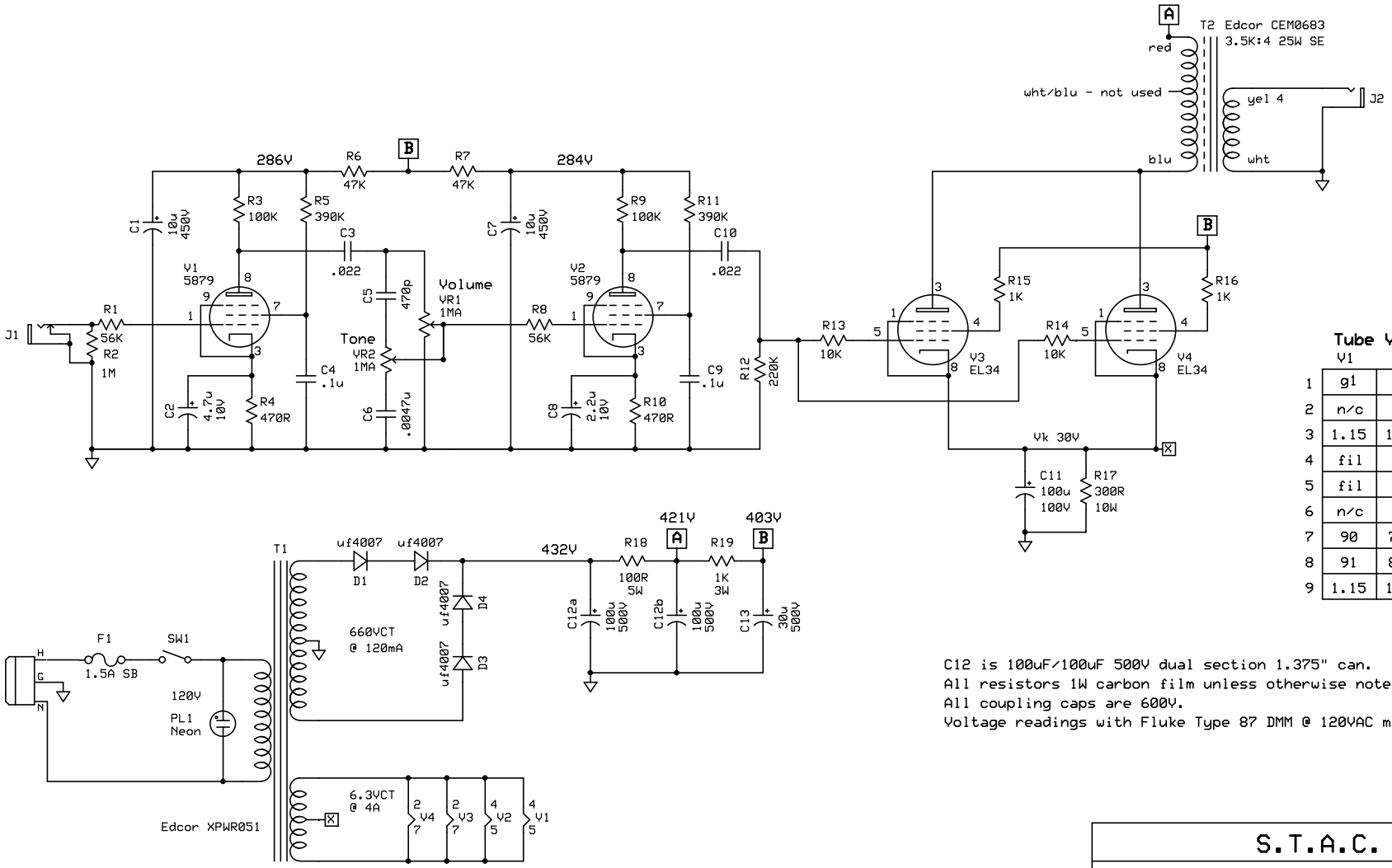

Tube Voltage Chart

	V1	V2	V3	V4
1	g1	g1	29.2	29.2
2	n/c	n/c	fil	fil
3	1.15	1.16	411	411
4	fil	fil	394	393
5	fil	fil	g1	g1
6	n/c	n/c	n/c	n/c
7	90	71	fil	fil
8	91	89	29.2	29.2
9	1.15	1.16	n/a	n/a

C12 is 100uF/100uF 500V dual section 1.375" can.
All resistors 1W carbon film unless otherwise noted.
All coupling caps are 600V.
Voltage readings with Fluke Type 87 DMM @ 120VAC mains.

S.T.A.C.

Zilker

P. Mitcheltree | Rev 1.0 | 6/22/2014 | Page 1 of 1