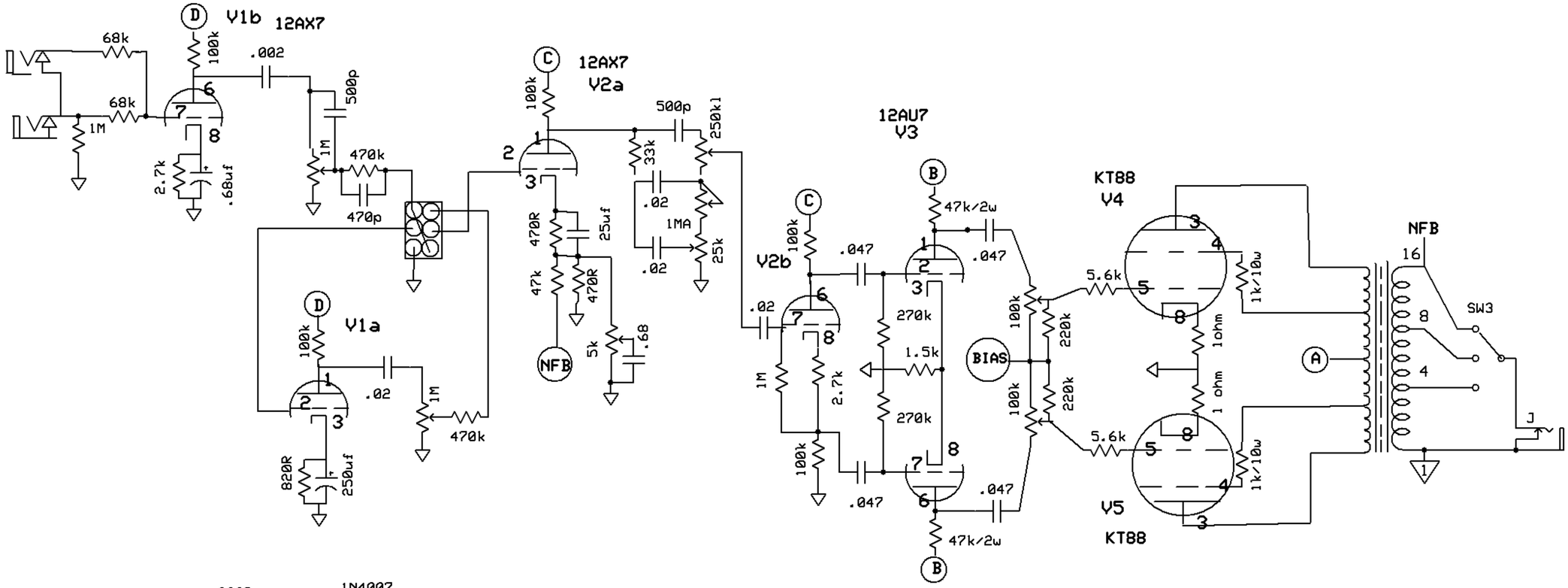

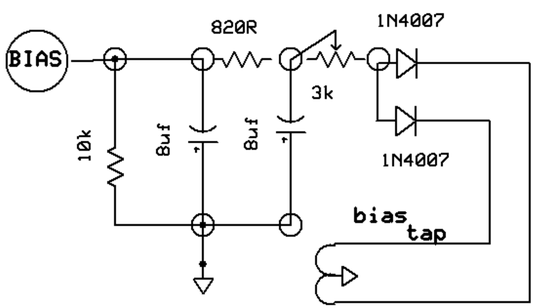

Marshall 1967
Major Lead
one wire mod & PPIMV

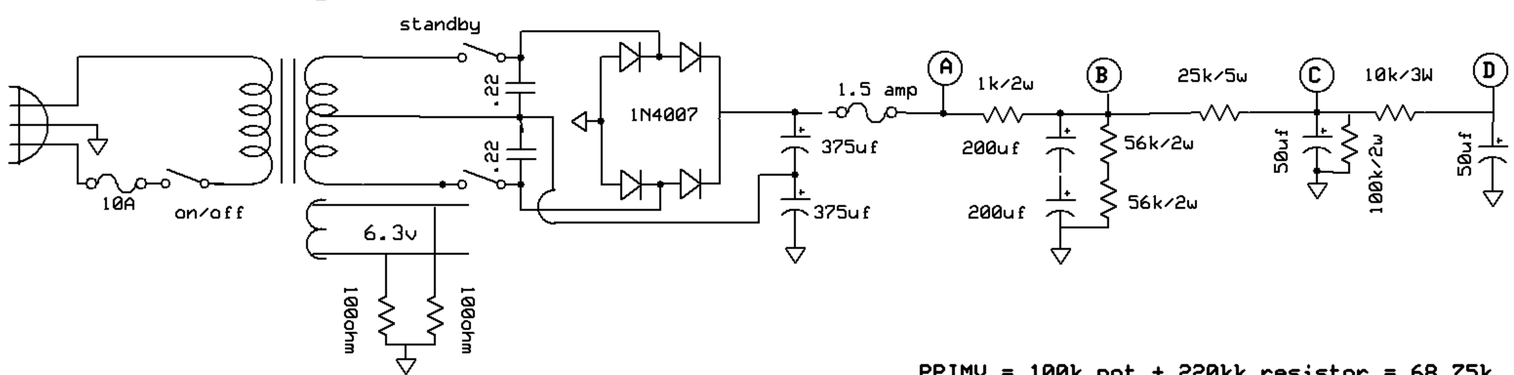

PPIMV = 100k pot + 220kk resistor = 68.75k (250k pot + 100k resistor = 71k)