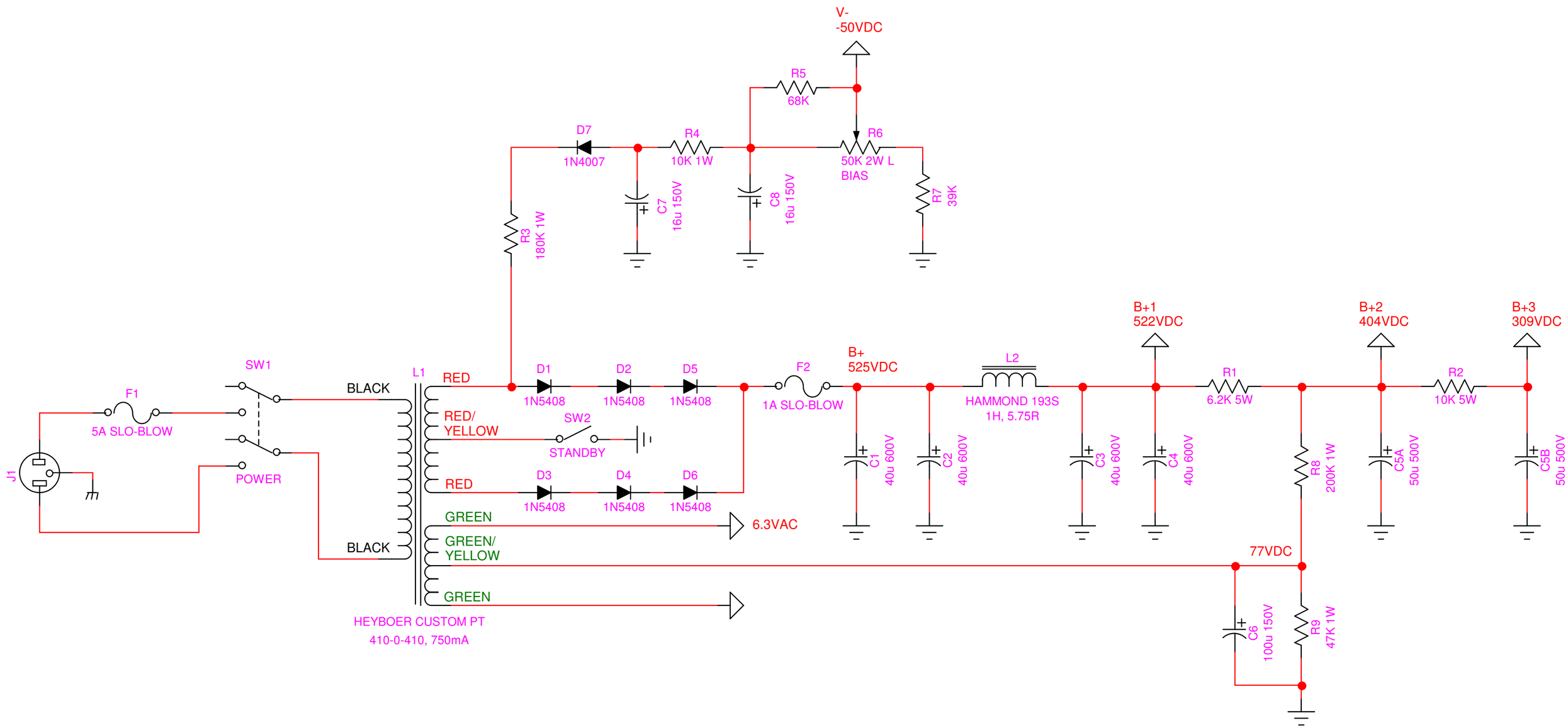

USE AT YOUR OWN RISK:
VTAMPSUSA (Michael B. Knauf) EXPRESSLY DISCLAIM ALL LIABILITY FOR INJURY OR PROPERTY DAMAGE RESULTING FROM THIS INFORMATION! ALL INFORMATION IS PROVIDED 'AS-IS' AND WITHOUT WARRANTY OF ANY KIND.

DRAWN BY: MBK
DRAWN DATE: 01-11-2009
REV:L