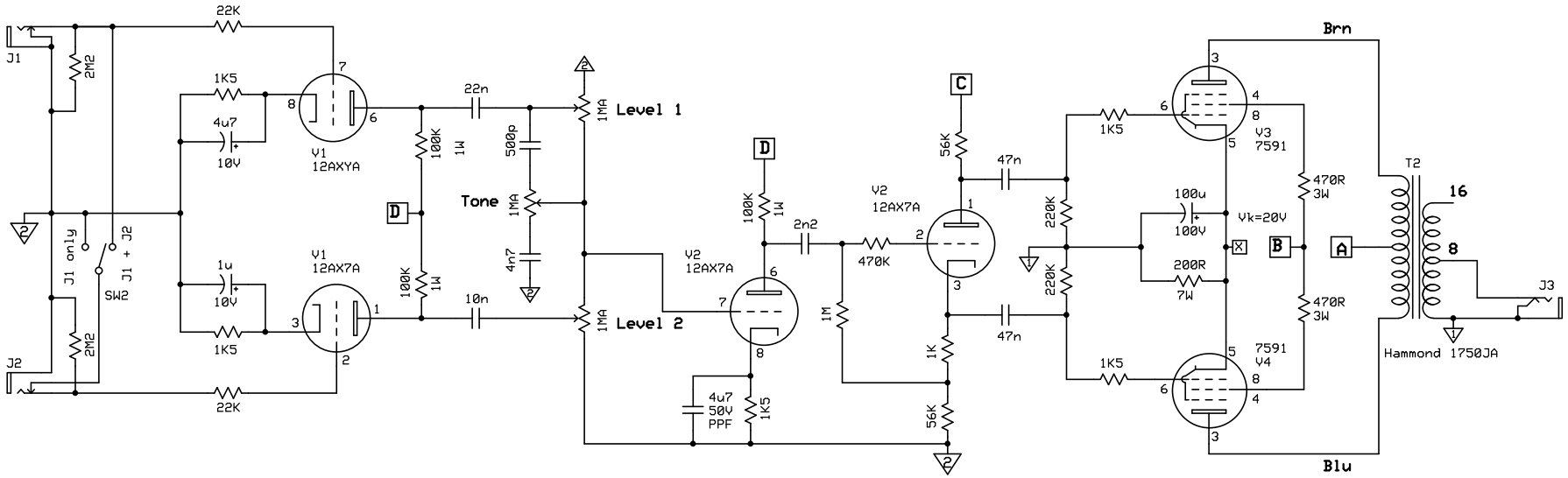

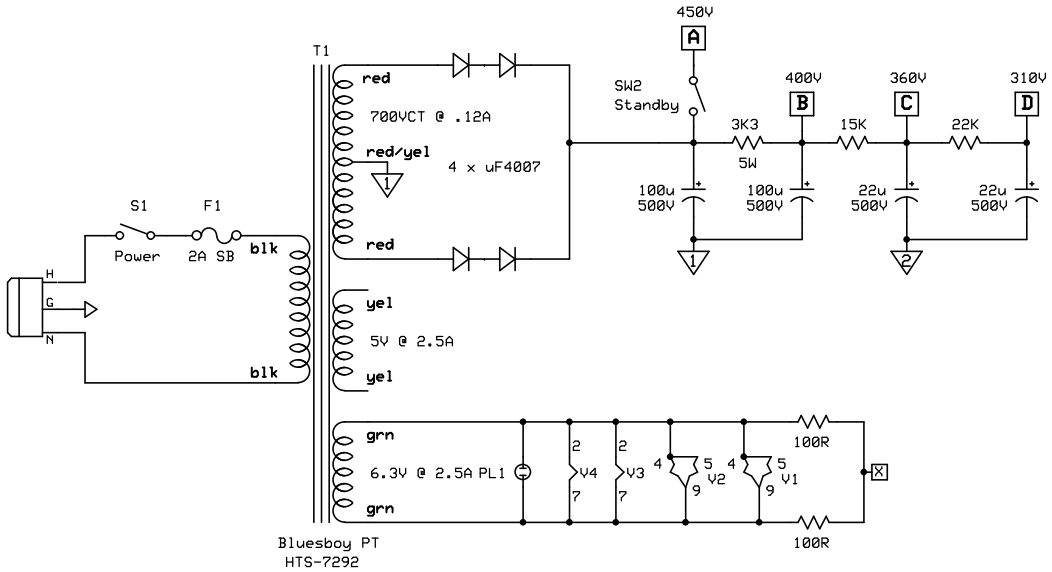

Notes:

All resistors are 1W CF, UON.
Power supply electrolytics are 500VDC minimum, UON.
All coupling capacitors are 500VDC minimum, UON.
OT spkeak load doubled for 8.5K reflected.
Output power is approximately 25W.

Tube Voltage Chart

Pin	V1	V2	V3	V4	
1			-	-	
2	g1	g1	fil	fil	
3					
4			-	-	
5	fil	fil	-	-	
6	fil	fil	g1	g1	
7			fil	fil	
8					
9	fil	fil	n/a	n/a	

No Name Amp Co.

Kahuna 5E3

El Dummi

Rev 1.0

11/1/2014