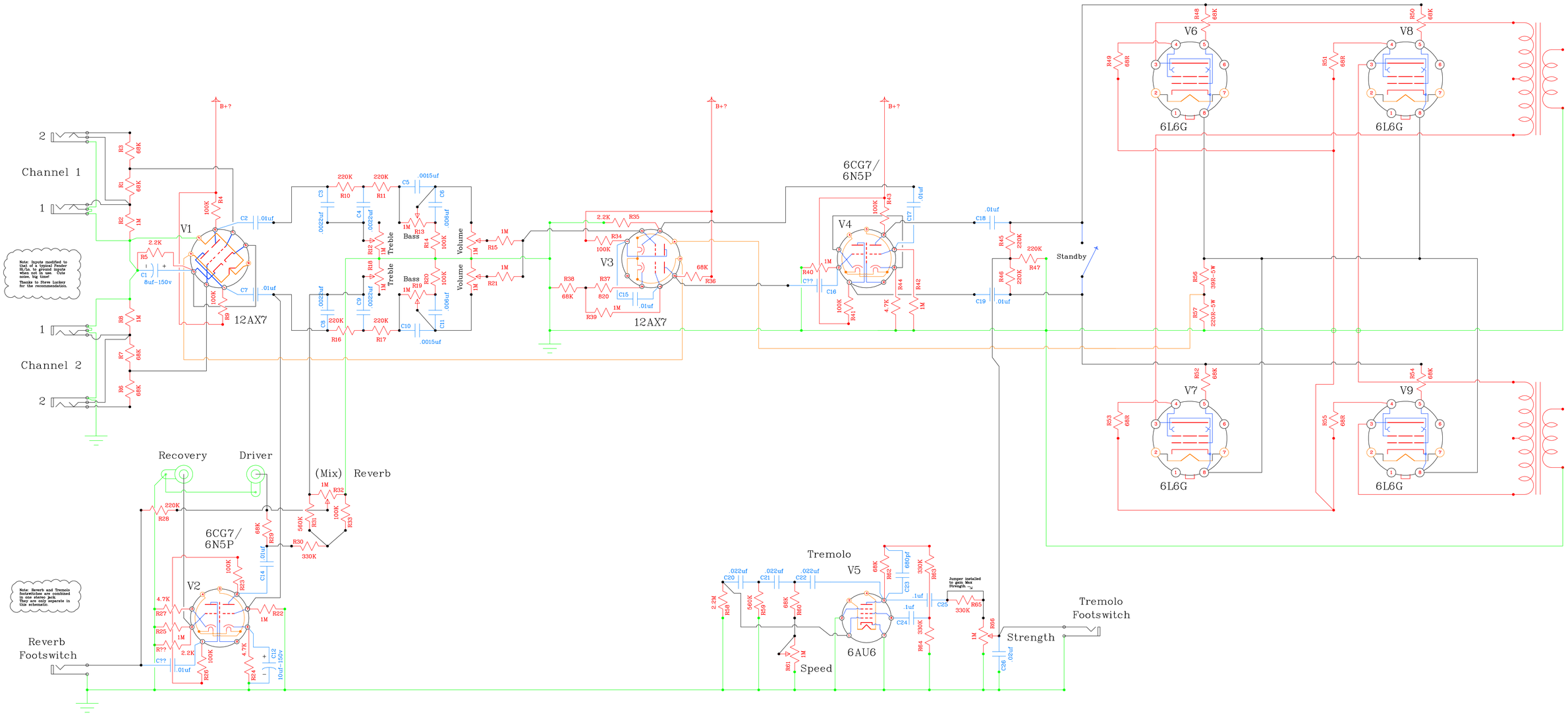
Channel 1
Channel 2
Note: Inputs modified to that of a typical Fender HI/Lo, to ground inputs when not in use. Cuts noise, big time!
Thanks to Steve Luckey for the recommendation.
V1
12AX7
V2
6CG7/
6N5P
V3
12AX7
V4
6CG7/
6N5P
V5
6AU6
V6
6L6G
V7
6L6G
V8
6L6G
V9
6L6G
Bass
Treble
Volume
Recovery
Driver
(Mix)
Reverb
Reverb
Footswitch
Tremolo
Speed
Strength
Tremolo
Footswitch
Standby
Jumper installed to gain Max Strength.
B+?