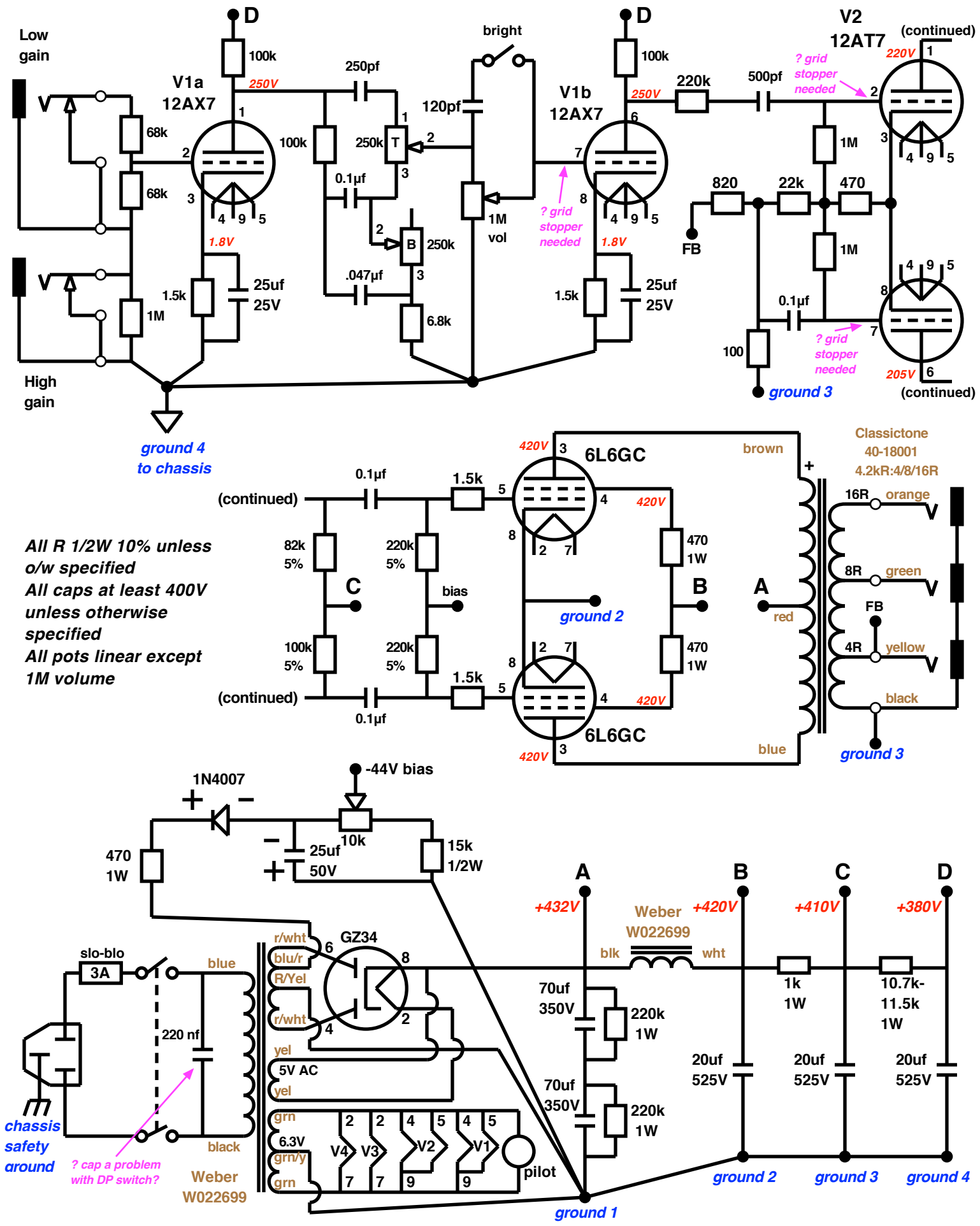
Low gain
High gain
V1a 12AX7
V1b 12AX7
V2 12AT7
D
100k
250V
68k
68k
1.8V
1.5k
1M
25uf 25V
250pf
100k
250k
T
0.1µf
.047µf
B
250k
6.8k
120pf
bright
1M vol
? grid stopper needed
220k
500pf
1M
820
22k
470
FB
100
0.1µf
220V
205V
(continued)
ground 3
ground 4 to chassis
6L6GC
420V
1.5k
0.1µf
82k 5%
220k 5%
100k 5%
C
bias
ground 2
470 1W
B
A
red
brown
blue
Classictone 40-18001 4.2kR:4/8/16R
16R
orange
8R
green
FB
4R
yellow
black
All R 1/2W 10% unless o/w specified
All caps at least 400V unless otherwise specified
All pots linear except 1M volume
1N4007
-44V bias
10k
25uf 50V
15k 1/2W
470 1W
slo-blo
3A
blue
black
220 nf
? cap a problem with DP switch?
chassis safety ground
Weber W022699
GZ34
r/wht
blu/r
R/Yel
r/wht
yel
5V AC
yel
grn
6.3V
grn/y
grn
V4
V3
V2
V1
pilot
+432V
+420V
+410V
+380V
blk
wht
70uf 350V
220k 1W
1k 1W
10.7k-11.5k 1W
20uf 525V
ground 1
ground 2
ground 3
ground 4