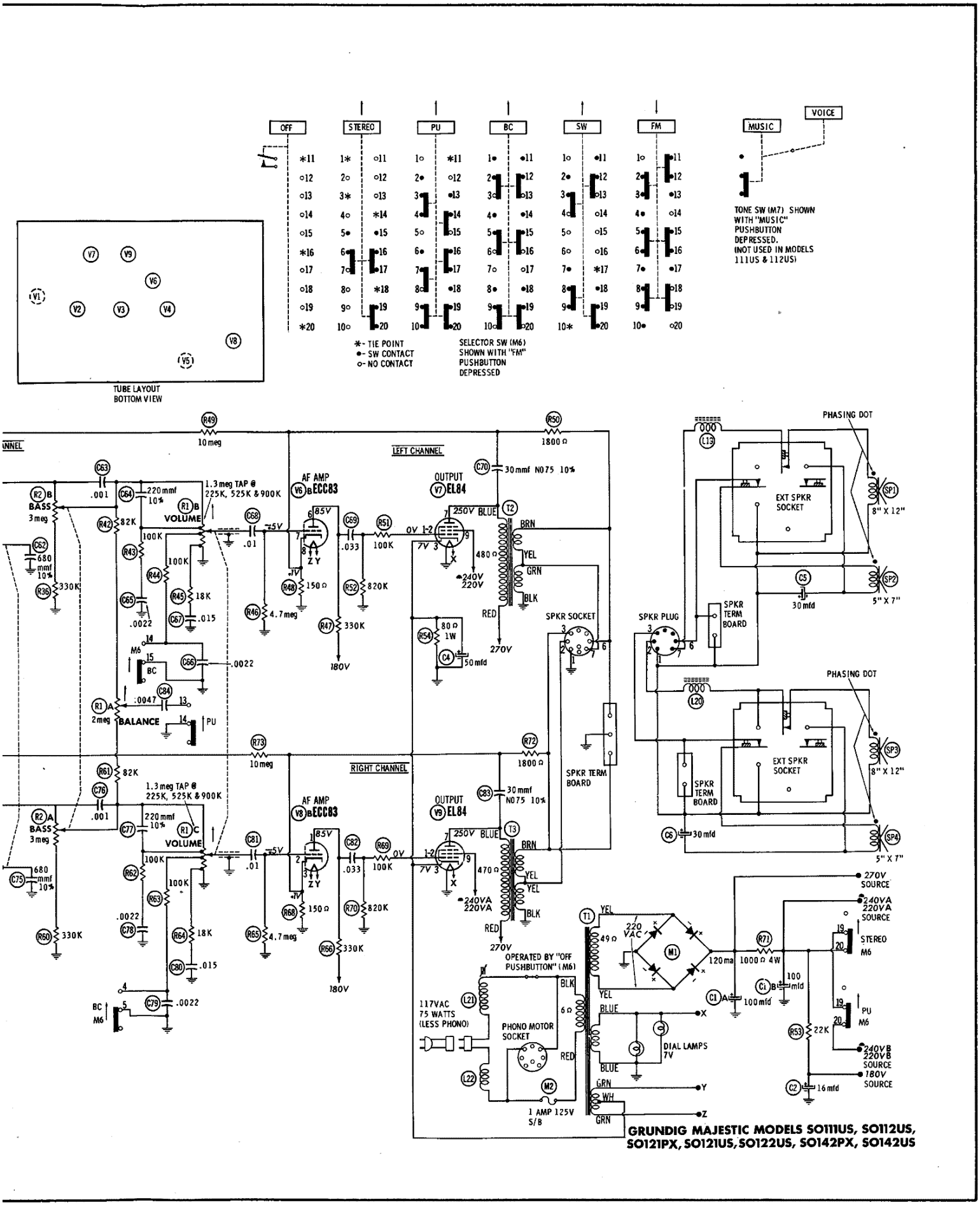

www.radiomuseum.org; upload by Arpad Roth; download by Ed Chambley Wed Nov 19 00:39:33 CET 2014 [1708 x 2092, 119kb]