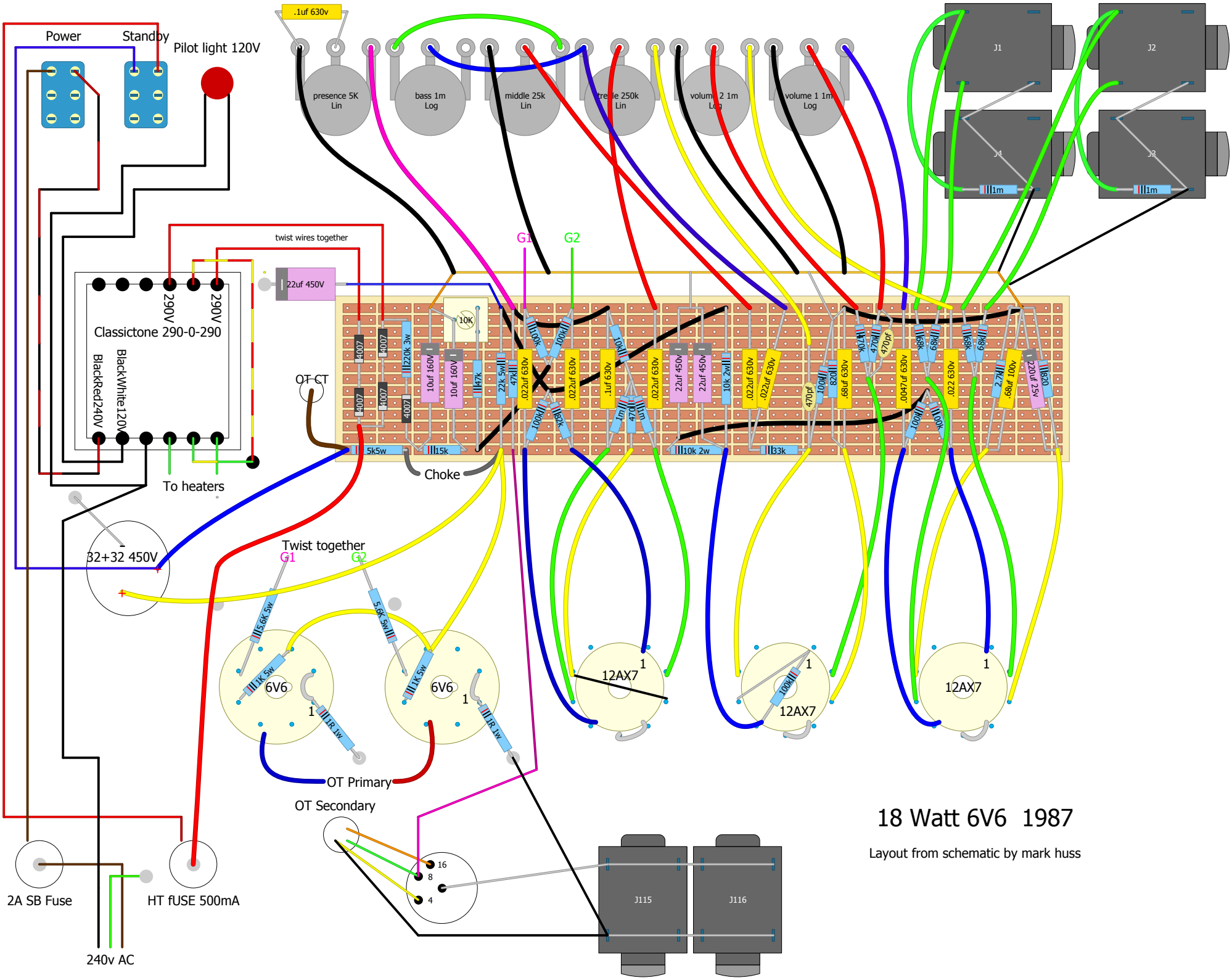

18 Watt 6V6 1987

Layout from schematic by mark huss