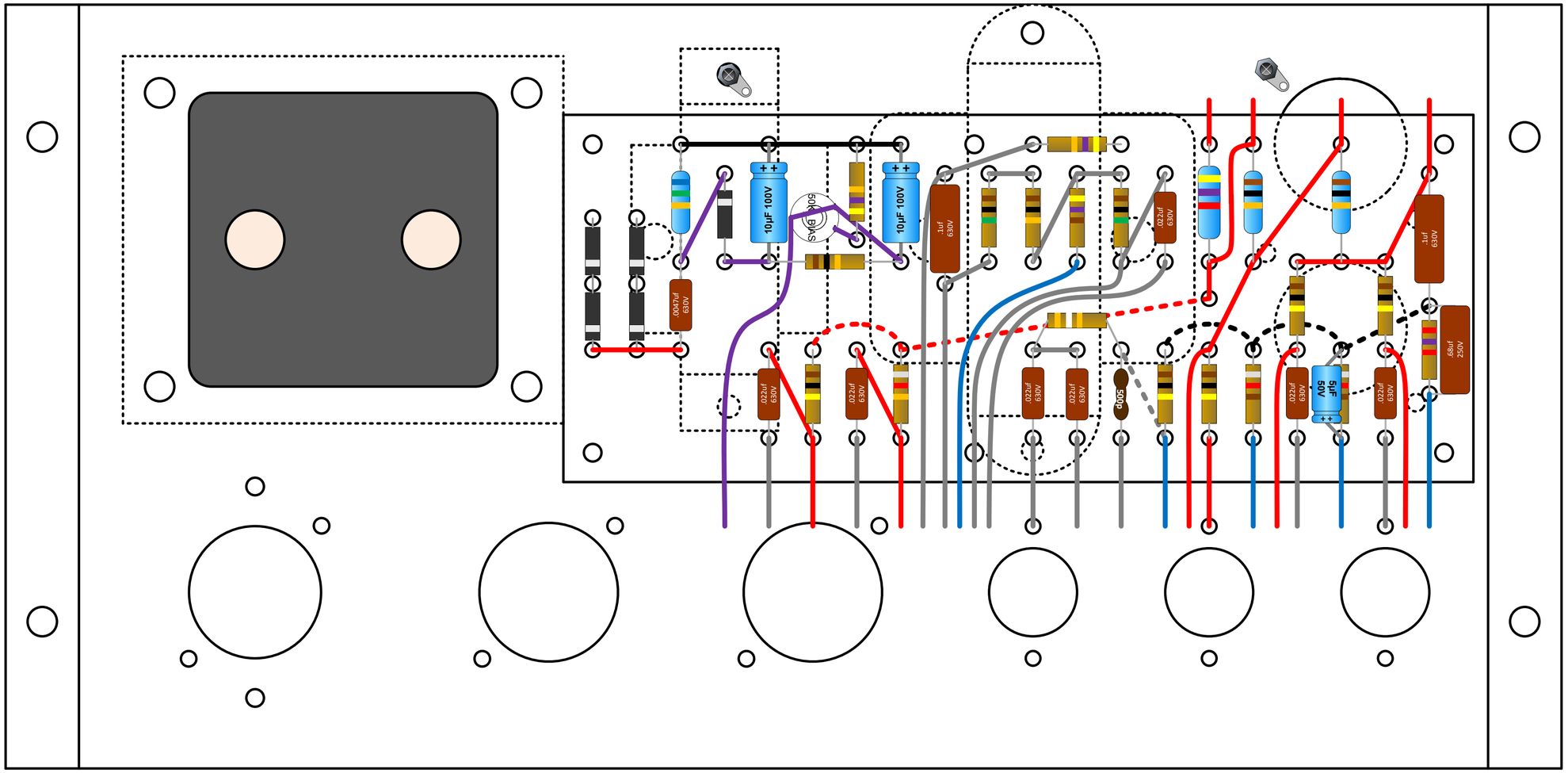
.0047uf
630V
10µF 100V
10µF 100V
.1uf
630V
.022uf
630V
.022uf
630V
.022uf
630V
.022uf
630V
500p
.022uf
630V
5µF
50V
.022uf
630V
.1uf
630V
.68uf
250V