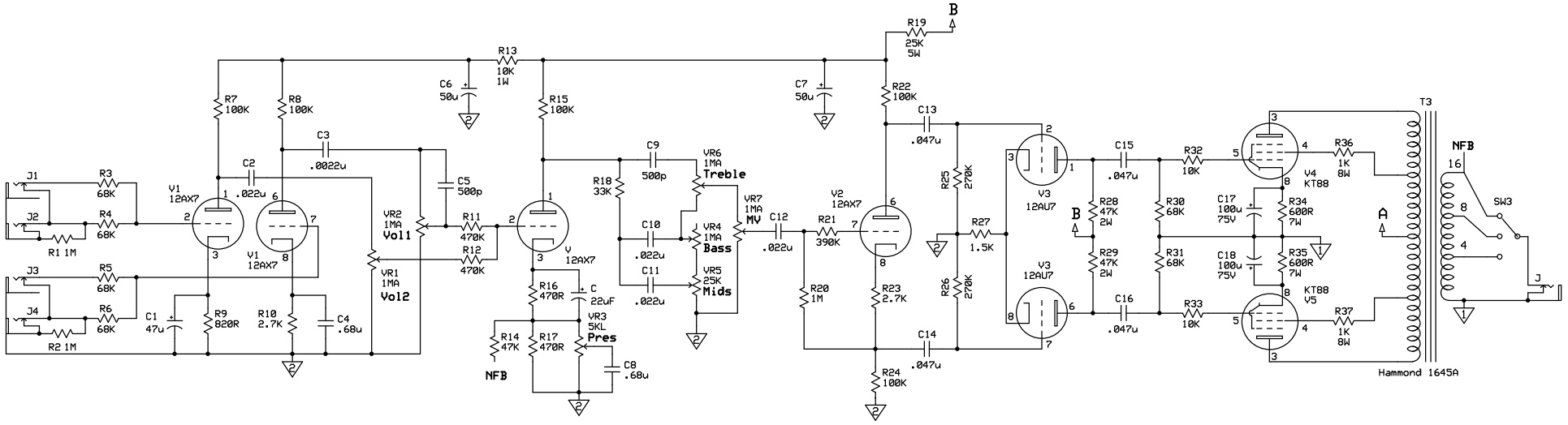

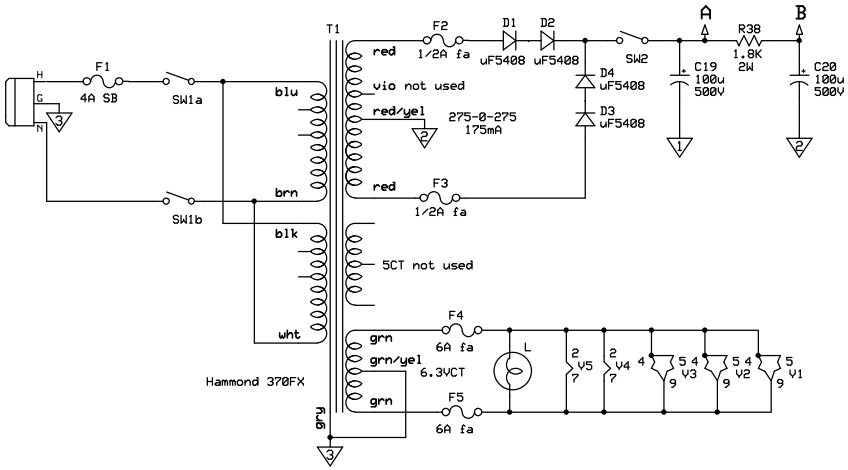

Forum Amps		
Major Minor III		
Marshall Major	Rev 1.0 9/11/2014	P. Mitcheltree