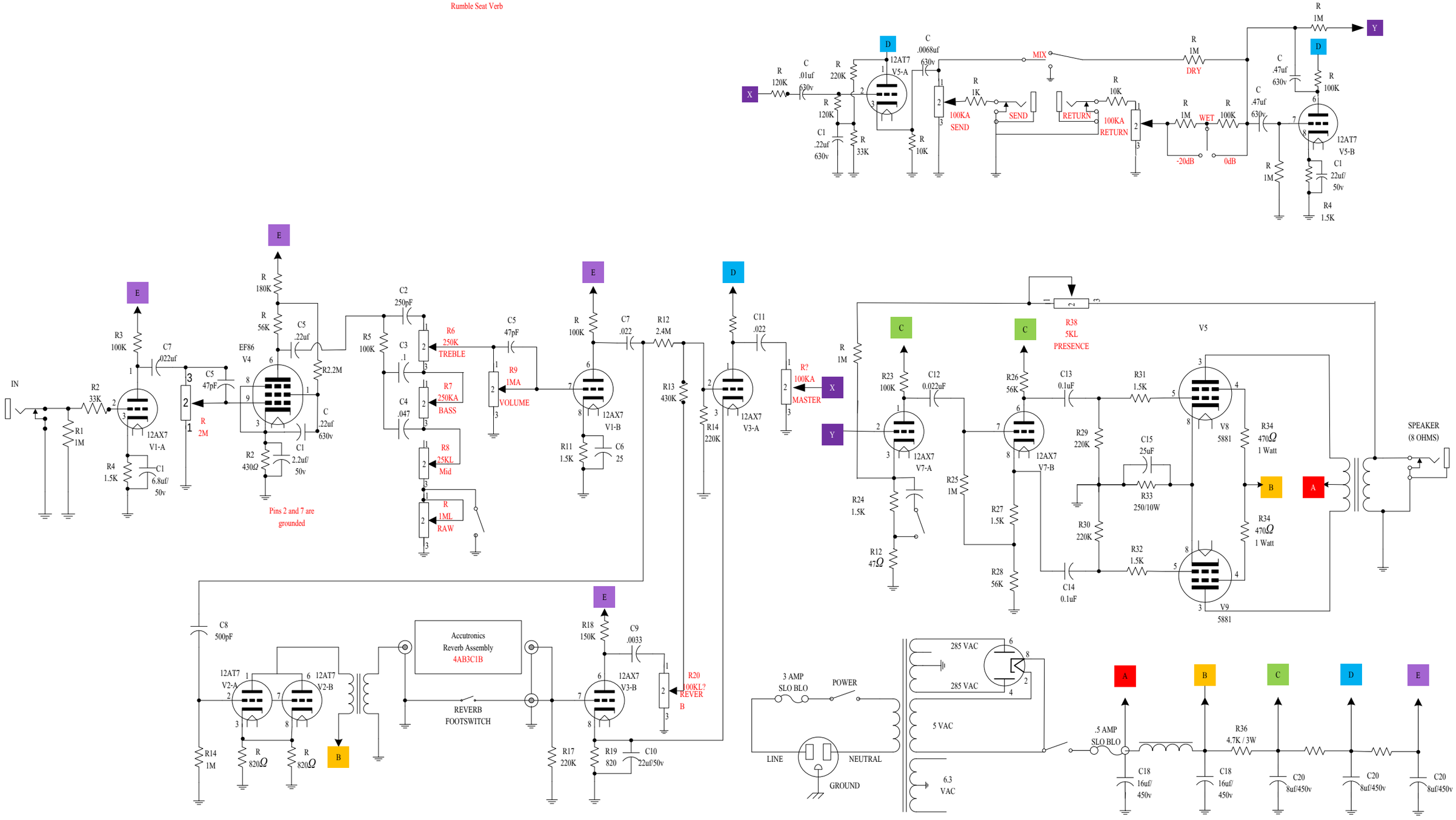Rumble Seat Verb