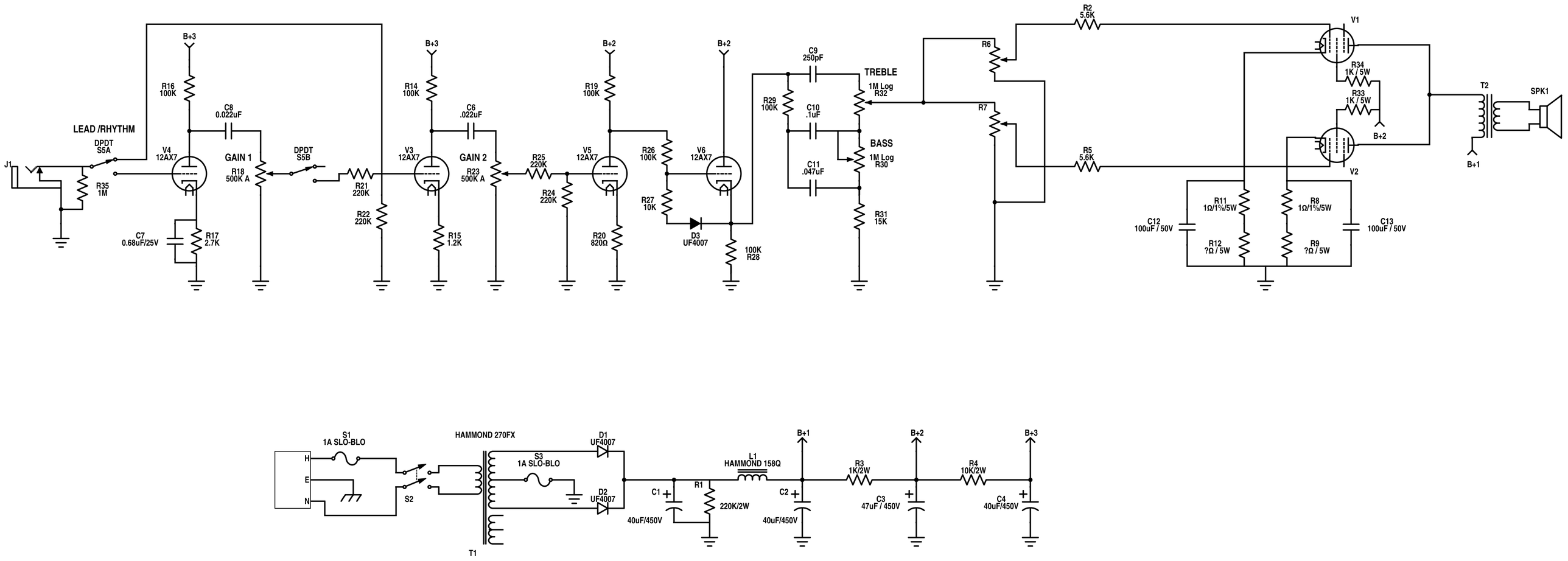
B+3
R16
100K
C8
0.022uF
LEAD /RHYTHM
DPDT
S5A
V4
12AX7
J1
R35
1M
C7
0.68uF/25V
R17
2.7K
GAIN 1
R18
500K A
DPDT
S5B
R21
220K
R22
220K
B+3
R14
100K
C6
.022uF
V3
12AX7
R15
1.2K
GAIN 2
R23
500K A
R25
220K
R24
220K
B+2
R19
100K
V5
12AX7
R20
820Ω
R26
100K
R27
10K
V6
12AX7
D3
UF4007
B+2
100K
R28
C9
250pF
R29
100K
C10
.1uF
C11
.047uF
TREBLE
1M Log
R32
BASS
1M Log
R30
R31
15K
R6
R7
R2
5.6K
R5
5.6K
V1
V2
R34
1K / 5W
R33
1K / 5W
B+2
T2
SPK1
B+1
R11
1Ω/1%/5W
R12
?Ω / 5W
R8
1Ω/1%/5W
R9
?Ω / 5W
C12
100uF / 50V
C13
100uF / 50V
S1
1A SLO-BLO
H
E
N
S2
HAMMOND 270FX
S3
1A SLO-BLO
D1
UF4007
D2
UF4007
T1
C1
40uF/450V
R1
220K/2W
L1
HAMMOND 158Q
B+1
C2
40uF/450V
R3
1K/2W
B+2
C3
47uF / 450V
R4
10K/2W
B+3
C4
40uF/450V