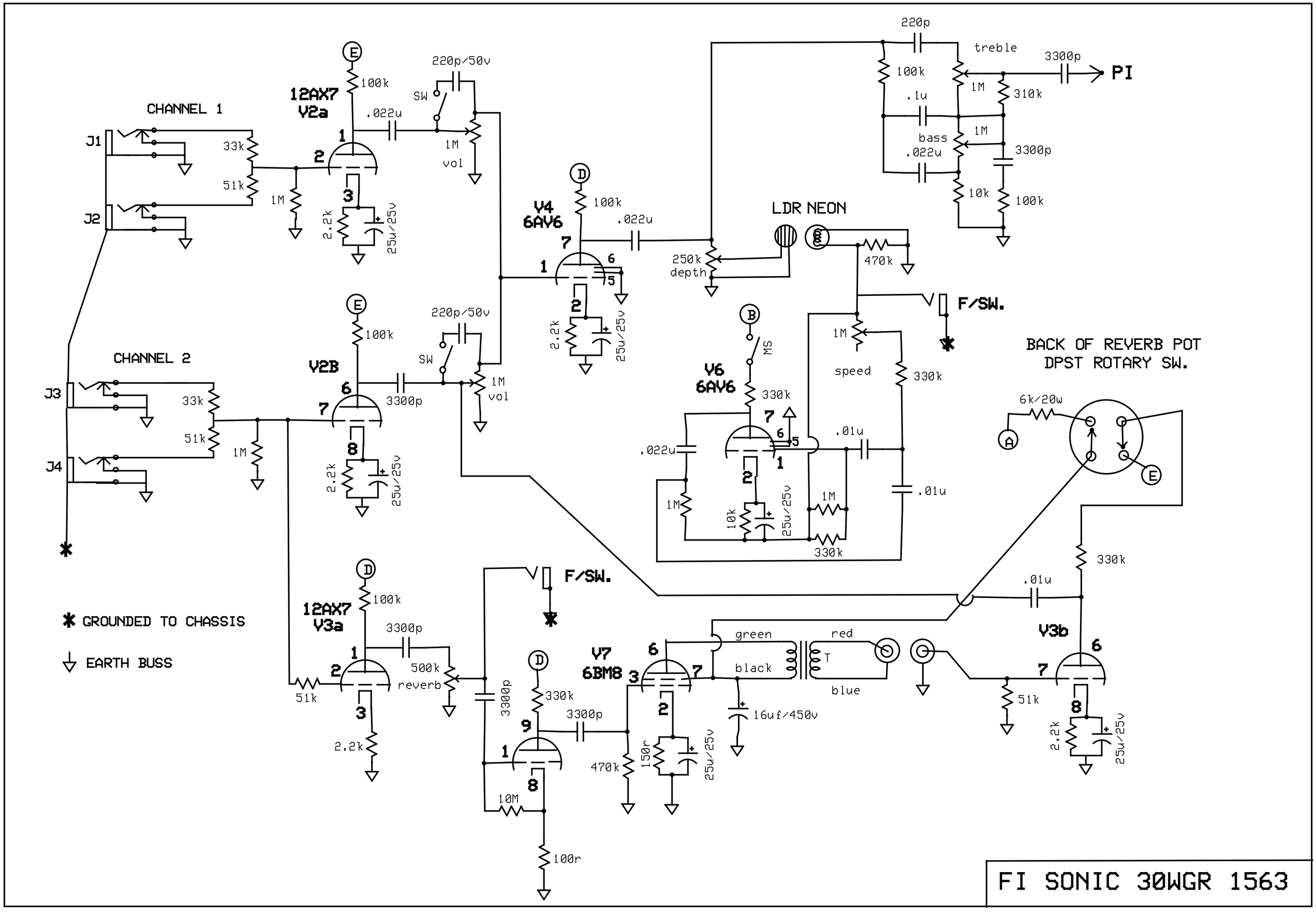

FI SONIC 30WGR 1563