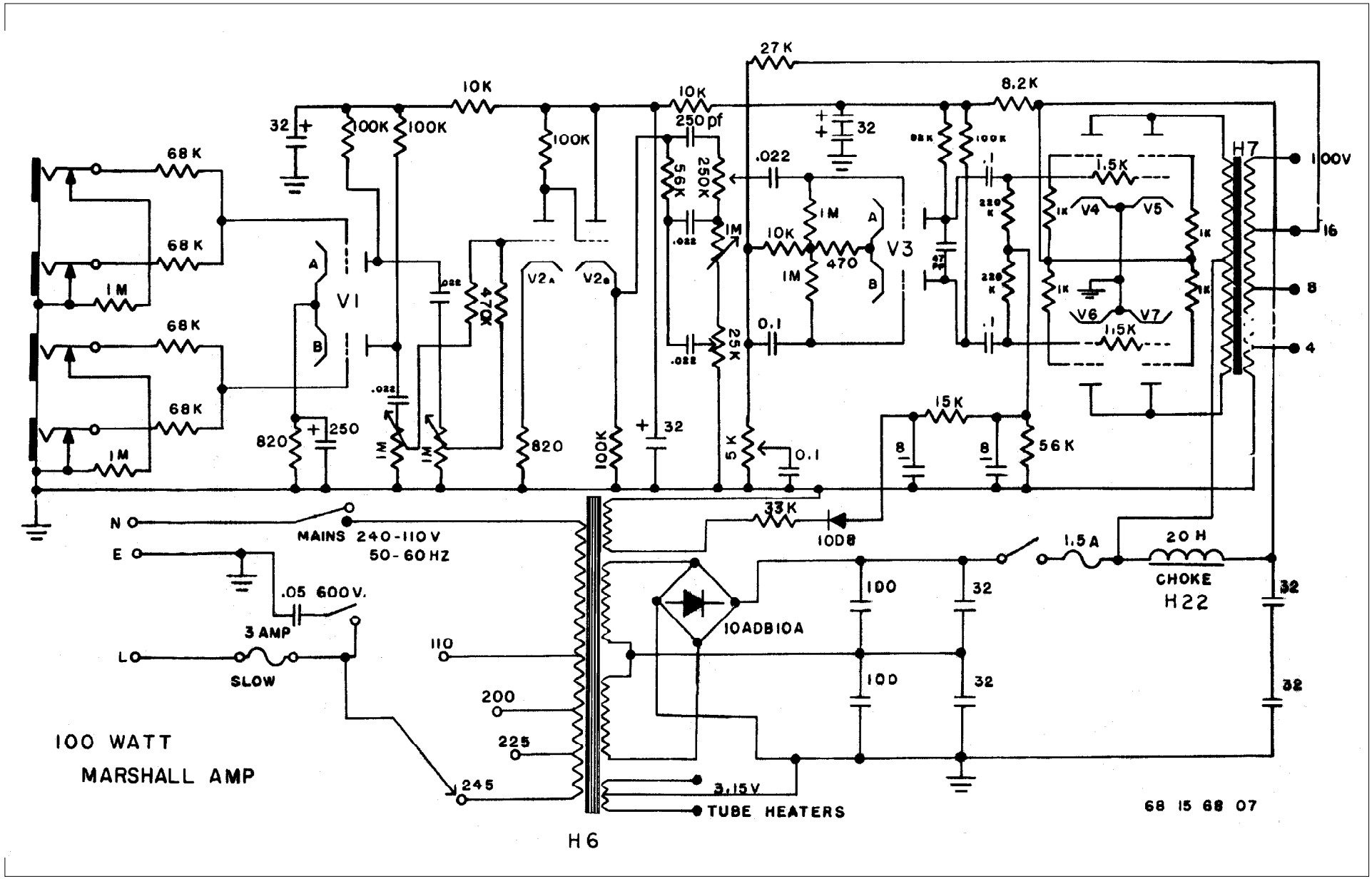
27 K
10K
10K
8.2K
32
100K
100K
100K
250 pf
68 K
68 K
1M
68K
68K
1M
.022
V1
A
B
V2A
V2B
470
820
250
820
100K
5K
0.1
.022
250K
56K
25K
1M
10K
470
1M
V3
A
B
0.1
32
1.5K
V4
V5
V6
V7
1K
1.5K
H7
100V
16
8
4
15K
8
8
56K
33K
10D8
N
E
L
MAINS 240-110V
50-60HZ
.05 600V.
3 AMP
SLOW
110
200
225
245
10ADB10A
100
100
32
32
1.5A
20 H
CHOKE
H22
32
32
3.15V
TUBE HEATERS
100 WATT
MARSHALL AMP
68 15 68 07
H6