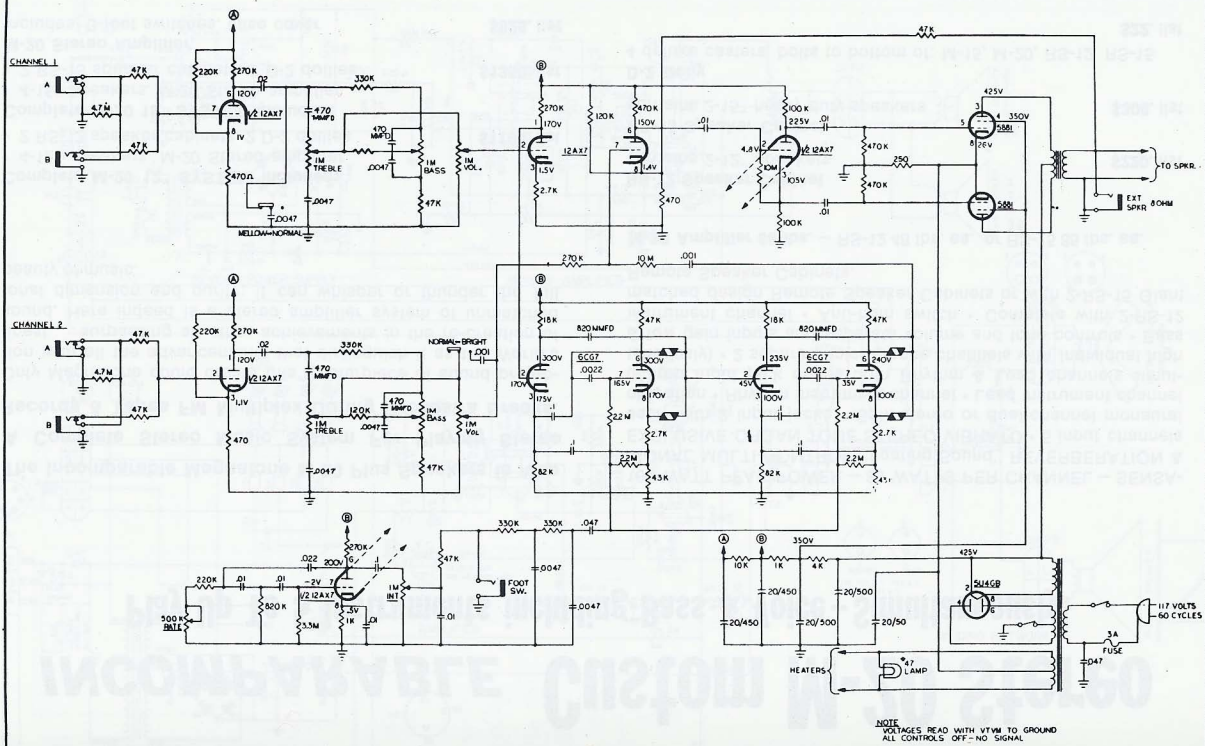

MAGNATONE INSTRUMENT AMPLIFIER

MODEL 260-A

Schematic Diagram Courtesy MAGNA ELECTRONICS INC