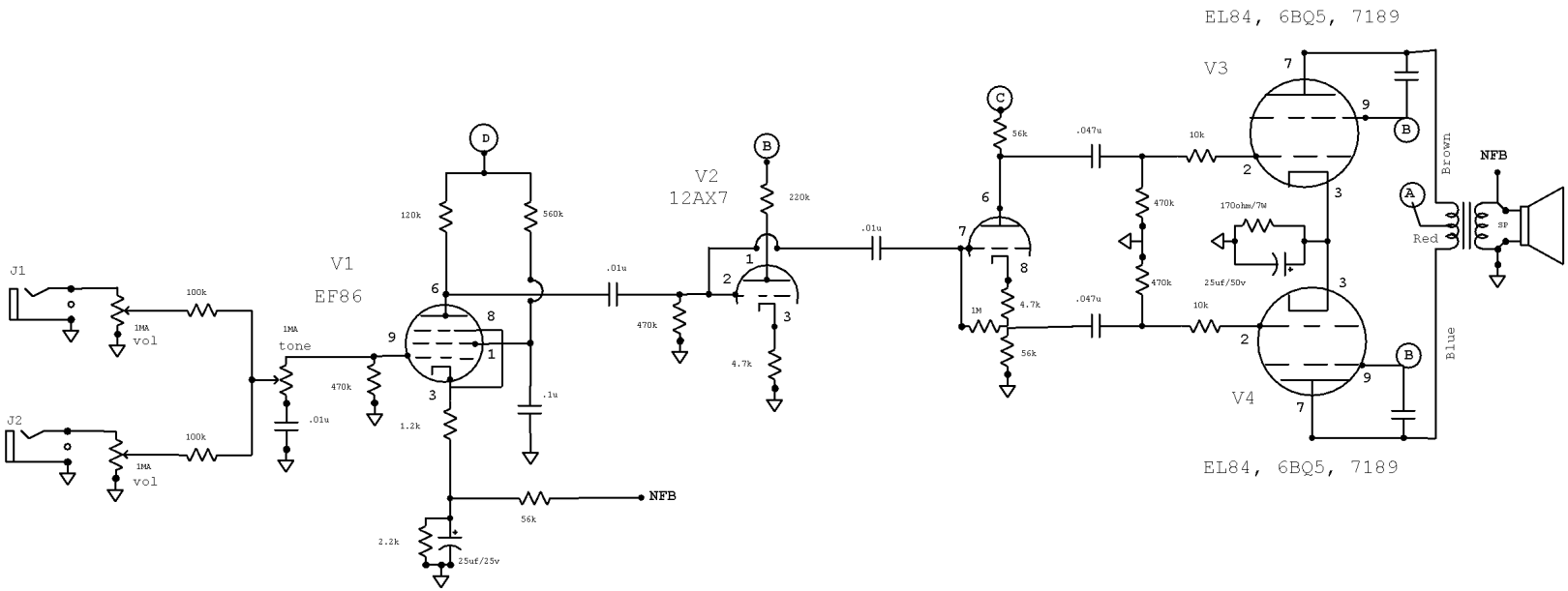

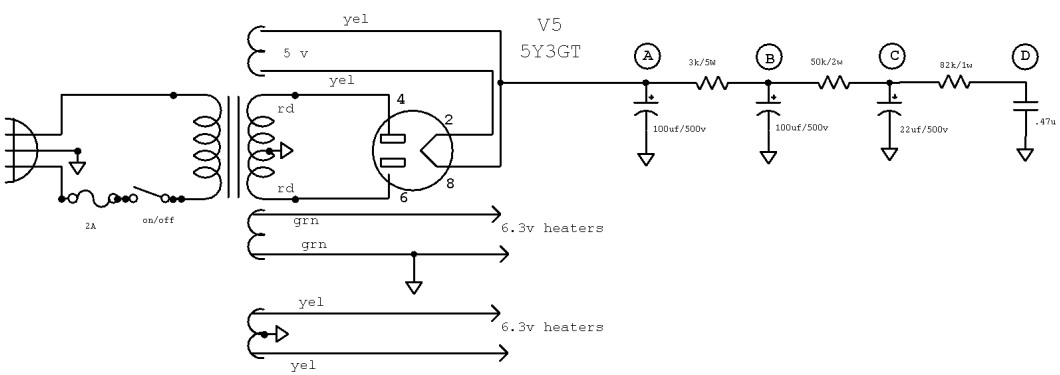

MATON #B4769 - SLUCKEY