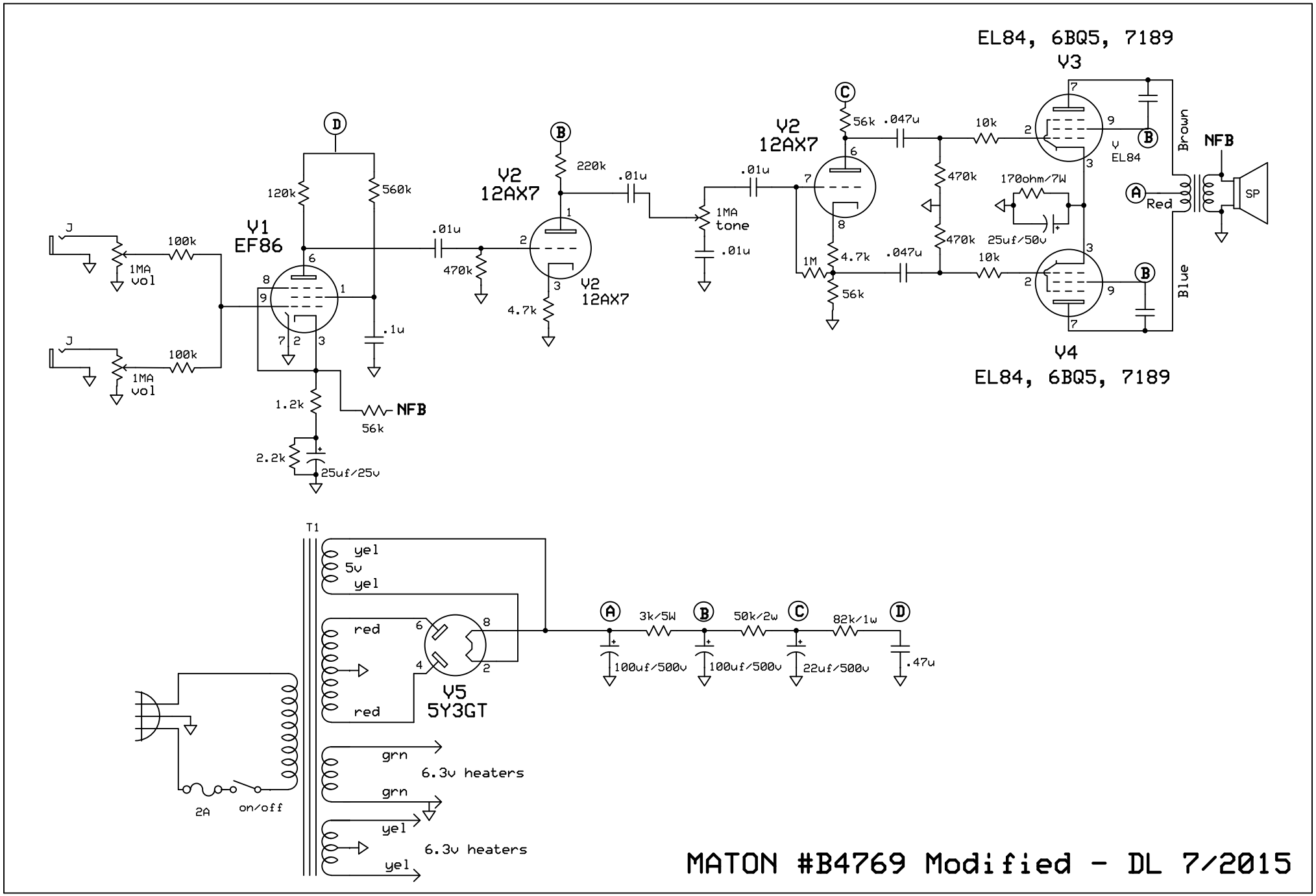
EL84, 6BQ5, 7189
V3
V4
EL84, 6BQ5, 7189
V1
EF86
V2
12AX7
V2
12AX7
V2
12AX7
V
EL84
V5
5Y3GT
J
J
100k
100k
1MA
vol
1MA
vol
120k
560k
.01u
470k
220k
.01u
4.7k
1MA
tone
.01u
.01u
56k
.047u
470k
1M
4.7k
56k
.047u
470k
10k
10k
170ohm/7W
25uf/50v
.1u
1.2k
NFB
56k
2.2k
25uf/25v
Brown
Red
Blue
NFB
SP
T1
yel
5v
yel
red
red
grn
grn
yel
yel
6.3v heaters
6.3v heaters
2A
on/off
3k/5W
50k/2w
82k/1w
100uf/500v
100uf/500v
22uf/500v
.47u
MATON #B4769 Modified - DL 7/2015