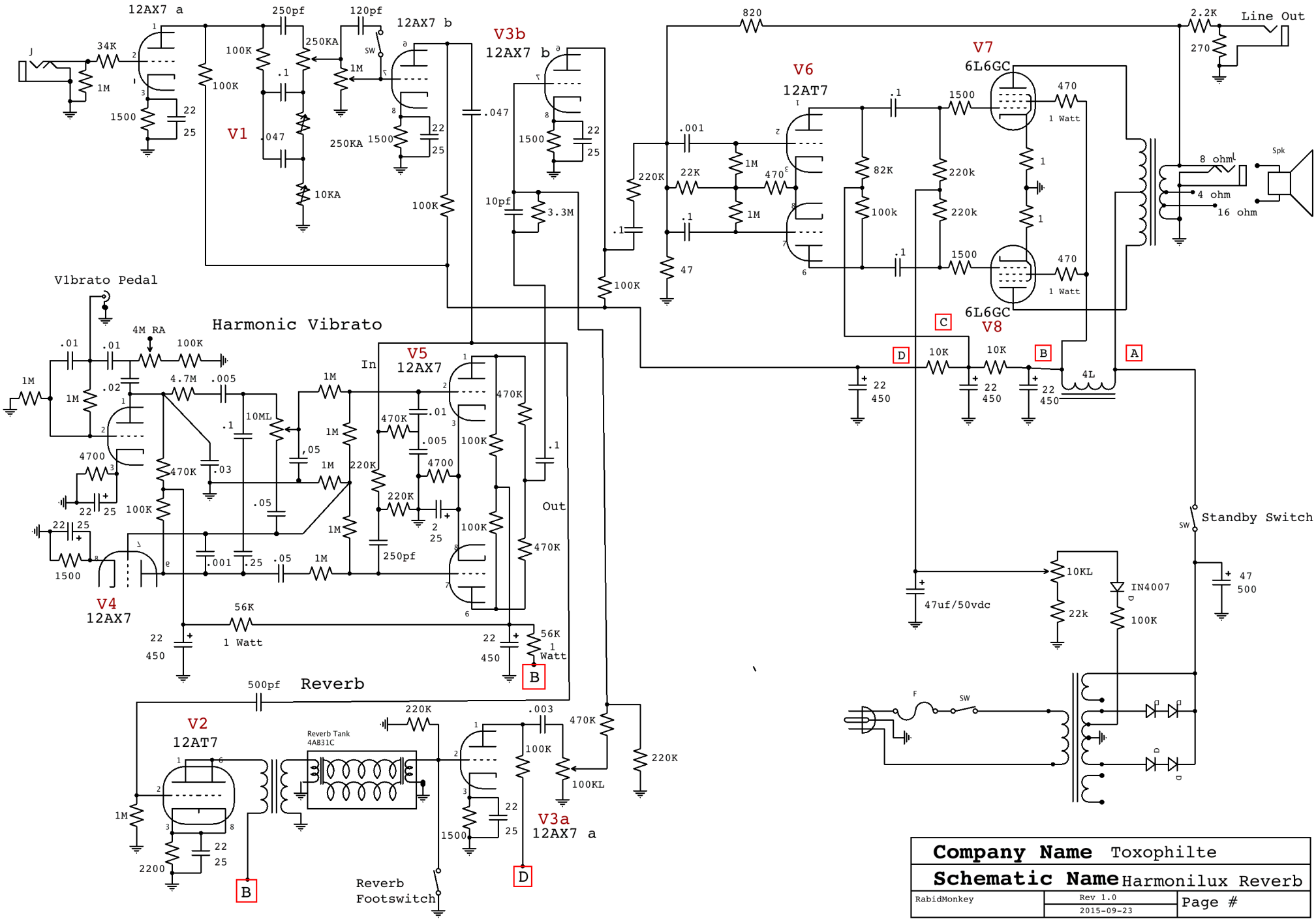
12AX7 a
V1
12AX7 b
V3b
12AX7 b
V6
12AT7
V7
6L6GC
6L6GC
V8
Line Out
Spk
8 ohm
4 ohm
16 ohm
V1brato Pedal
Harmonic Vibrato
V5
12AX7
In
Out
V4
12AX7
Standby Switch
Reverb
V2
12AT7
Reverb Tank
4AB31C
V3a
12AX7 a
Reverb
Footswitch
47uf/50vdc
IN4007
Company Name Toxophilte
Schematic Name Harmonilux Reverb
RabidMonkey
Rev 1.0
2015-09-23
Page #