1971 SUNN SCEPTRE with MID BOOST

drawn by Steve Luckey, 07/01/2006

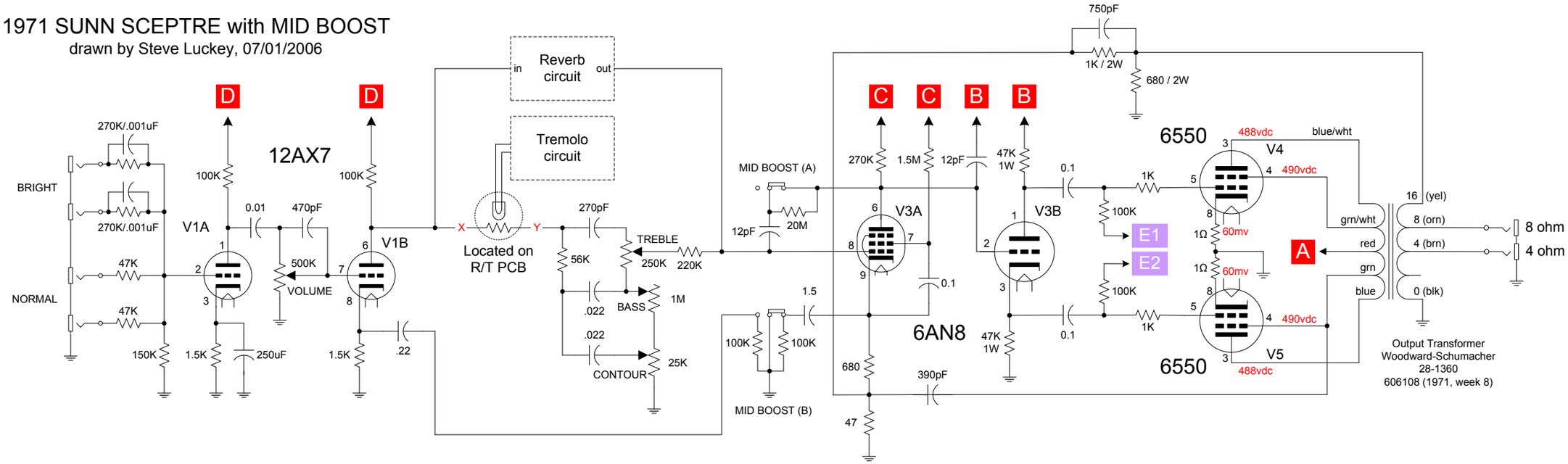

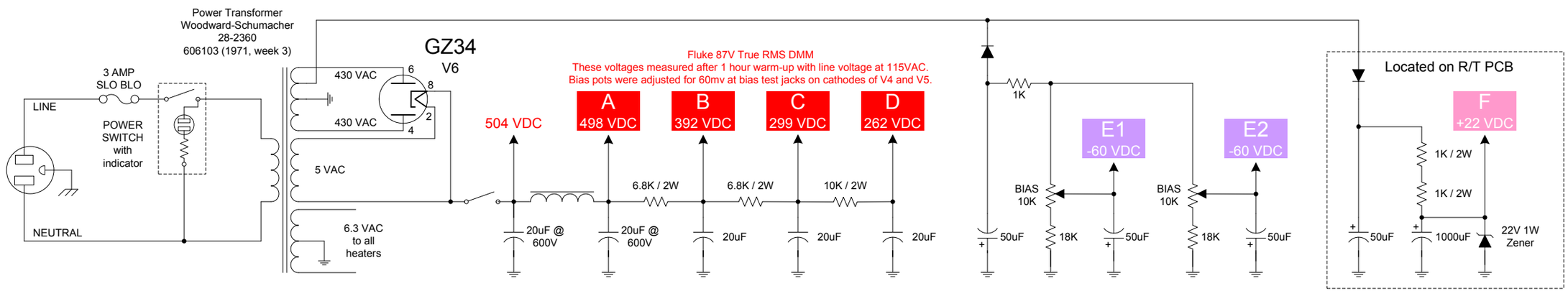

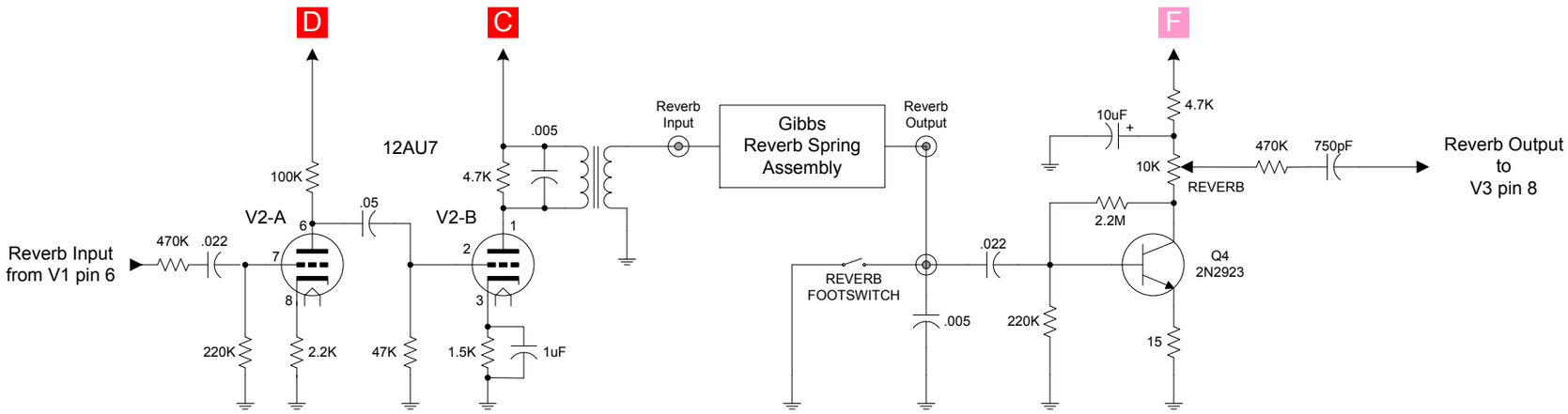
D
C
F
12AU7
V2-A
V2-B
Reverb Input
from V1 pin 6
470K
.022
100K
.05
220K
2.2K
47K
4.7K
.005
1.5K
1uF
Reverb
Input
Gibbs
Reverb Spring
Assembly
Reverb
Output
REVERB
FOOTSWITCH
.005
.022
220K
10uF
4.7K
10K
REVERB
470K
750pF
2.2M
Q4
2N2923
15
Reverb Output
to
V3 pin 8

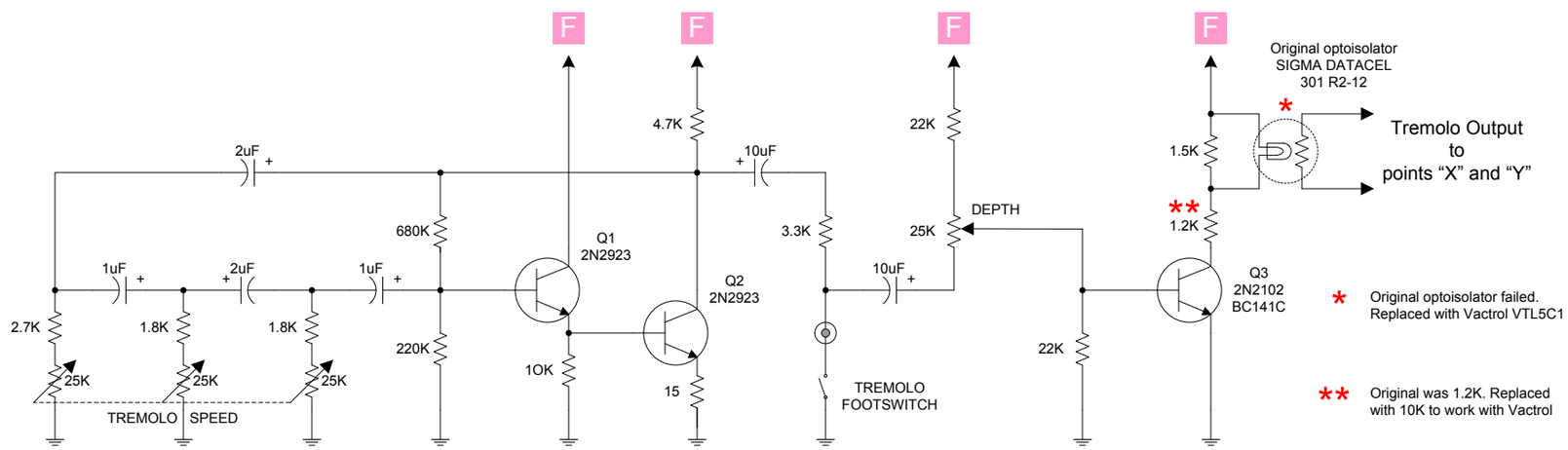
F
F
F
F
2uF
1uF
2uF
1uF
2.7K
1.8K
1.8K
25K
25K
25K
TREMOLO
SPEED
680K
220K
Q1
2N2923
Q2
2N2923
1OK
15
4.7K
10uF
3.3K
10uF
TREMOLO
FOOTSWITCH
22K
25K
DEPTH
22K
Original optoisolator
SIGMA DATACEL
301 R2-12
*
1.5K
**
1.2K
Q3
2N2102
BC141C
Tremolo Output
to
points “X” and “Y”
* Original optoisolator failed.
Replaced with Vactrol VTL5C1
** Original was 1.2K. Replaced
with 10K to work with Vactrol

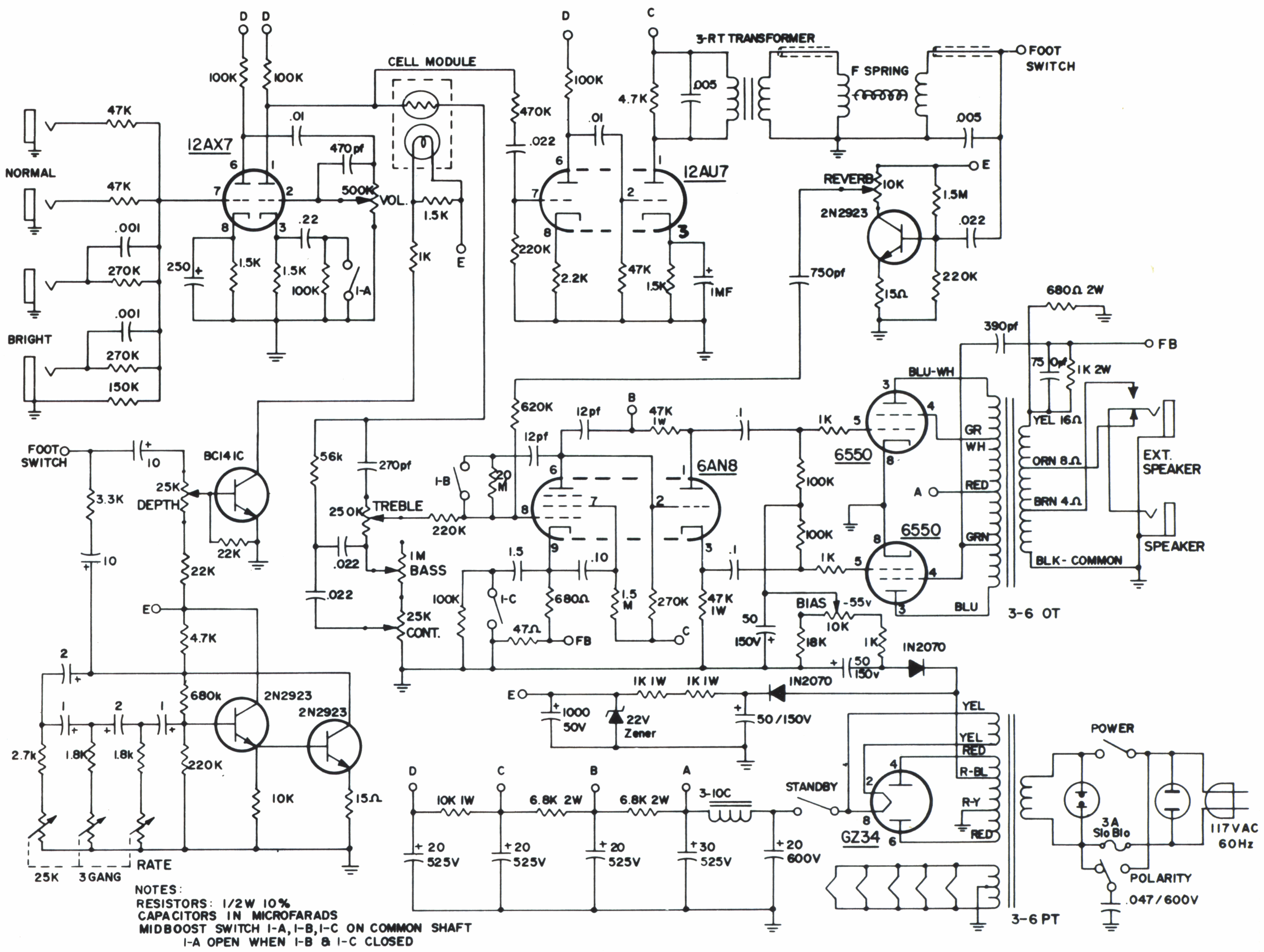

NOTES:
RESISTORS: 1/2W 10%
CAPACITORS IN MICROFARADS
MIDBOOST SWITCH 1-A, 1-B, 1-C ON COMMON SHAFT
1-A OPEN WHEN 1-B & 1-C CLOSED