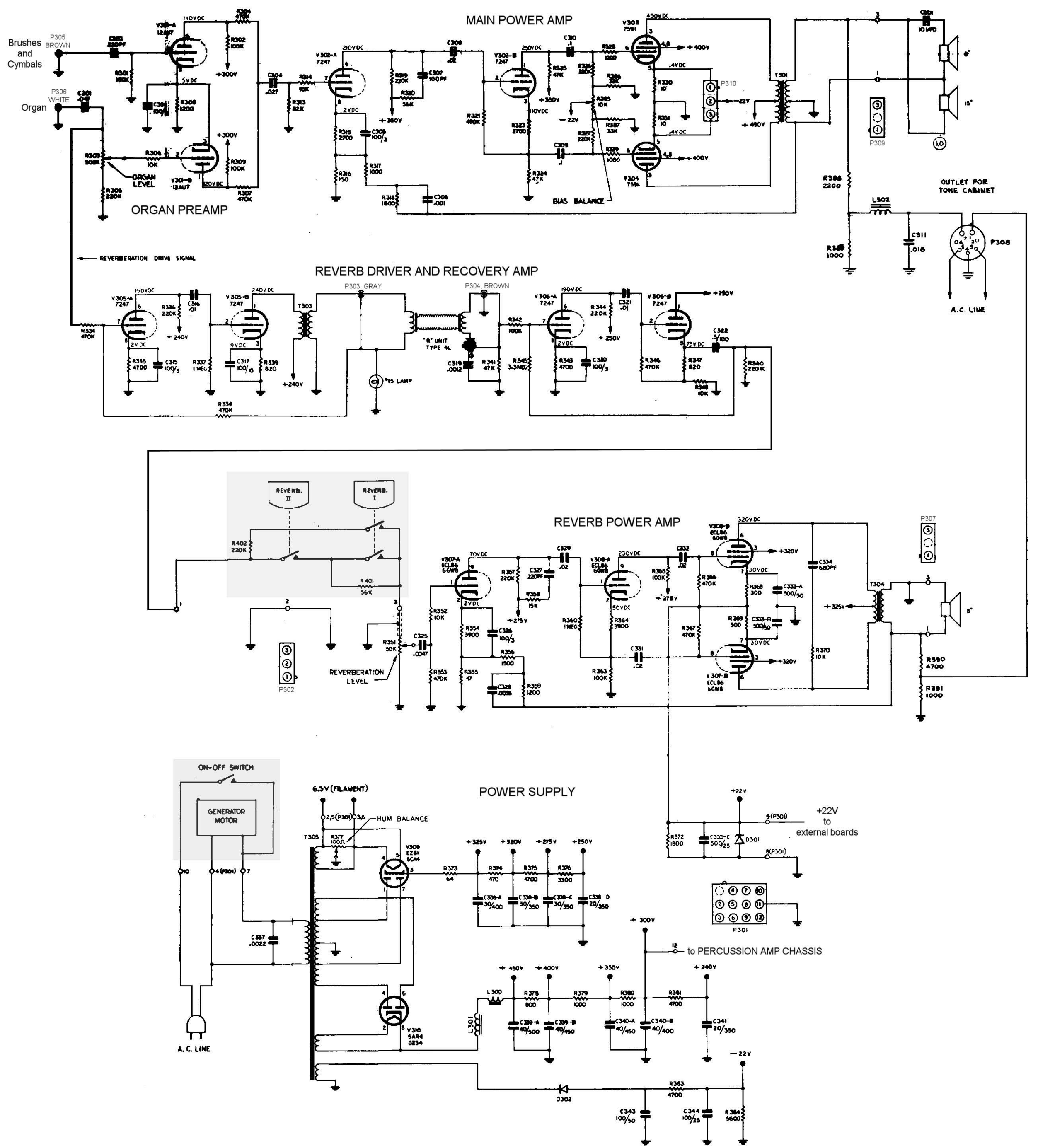
MAIN POWER AMP
ORGAN PREAMP
REVERB DRIVER AND RECOVERY AMP
REVERB POWER AMP
POWER SUPPLY
Brushes and Cymbals
P305 BROWN
P306 WHITE
Organ
ORGAN LEVEL
BIAS BALANCE
OUTLET FOR TONE CABINET
A.C. LINE
REVERBERATION DRIVE SIGNAL
P303, GRAY
P304, BROWN
"R" UNIT TYPE 4L
#15 LAMP
REVERB. II
REVERB. I
REVERBERATION LEVEL
P302
P307
ON-OFF SWITCH
GENERATOR MOTOR
6.3V (FILAMENT)
HUM BALANCE
+22V to external boards
to PERCUSSION AMP CHASSIS
P301

Hammond AO-63 Chassis

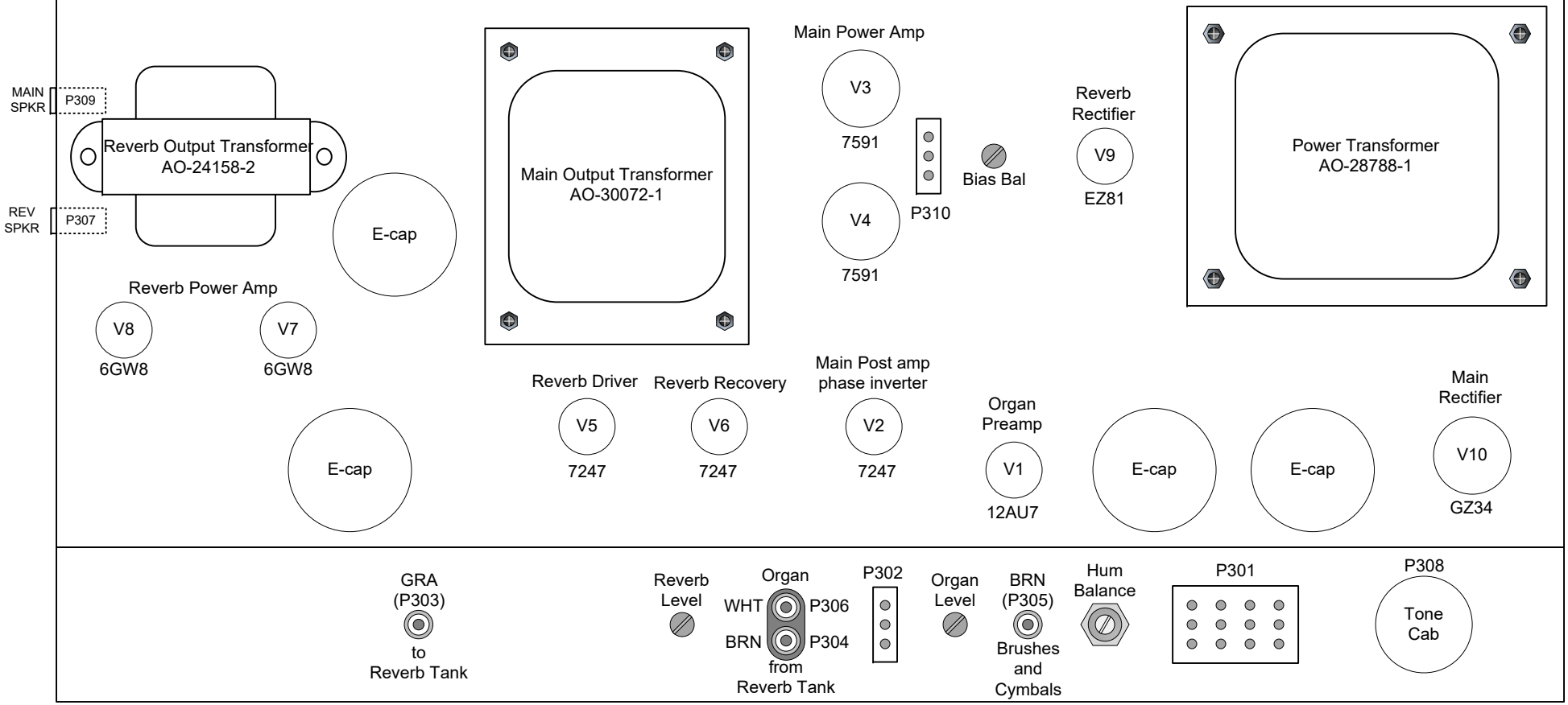

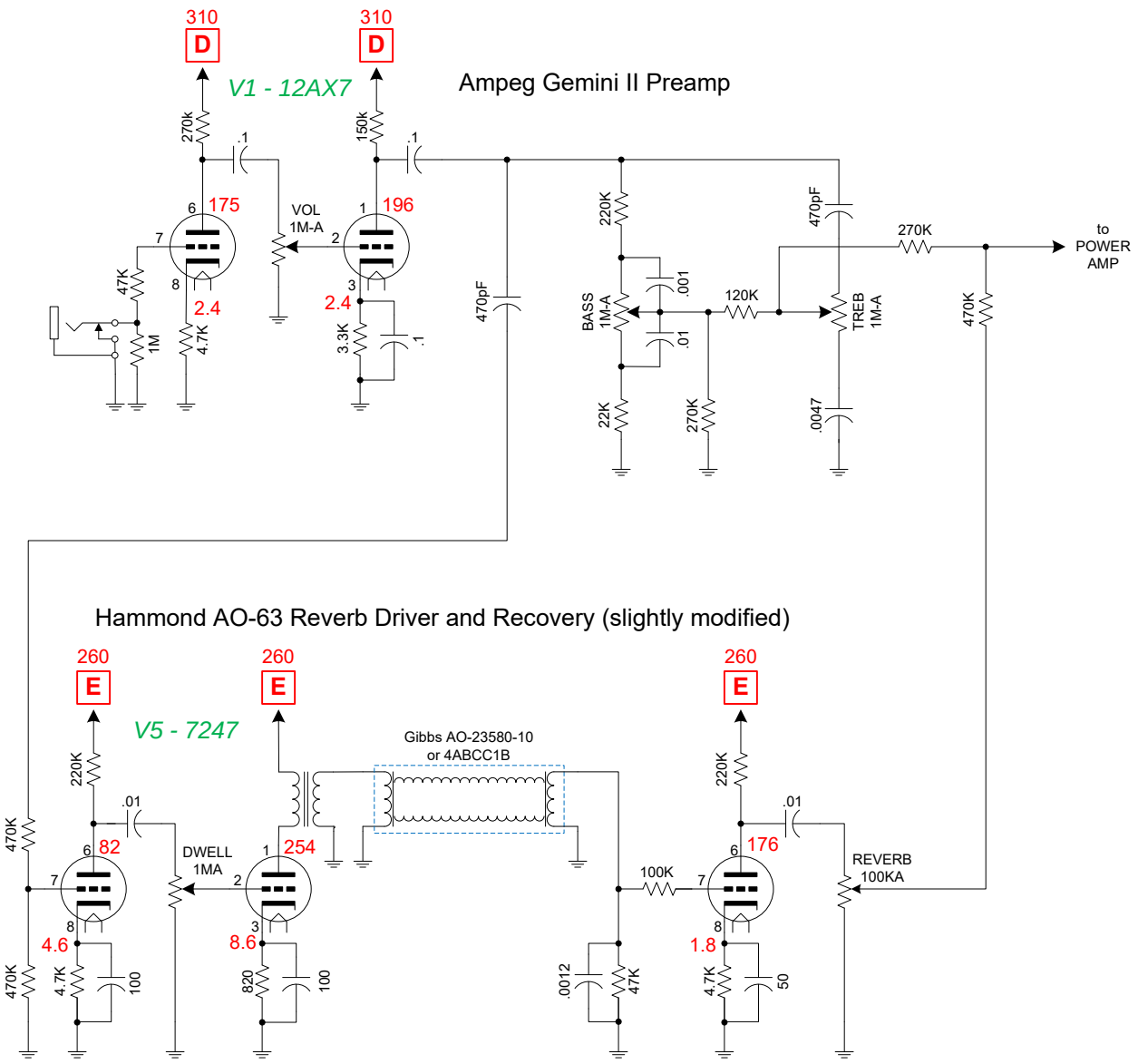
Ampeg Gemini II Preamp
V1 - 12AX7
310
D
310
D
270k
150k
.1
.1
175
196
VOL
1M-A
2.4
2.4
47K
1M
4.7K
3.3K
.1
470pF
220K
.001
.01
BASS
1M-A
22K
120K
270K
470pF
TREB
1M-A
.0047
270K
470K
to
POWER
AMP
Hammond AO-63 Reverb Driver and Recovery (slightly modified)
V5 - 7247
260
E
260
E
260
E
Gibbs AO-23580-10
or 4ABCC1B
220K
.01
470K
82
DWELL
1MA
254
100K
176
REVERB
100KA
4.6
8.6
1.8
4.7K
100
820
100
.0012
47K
4.7K
50

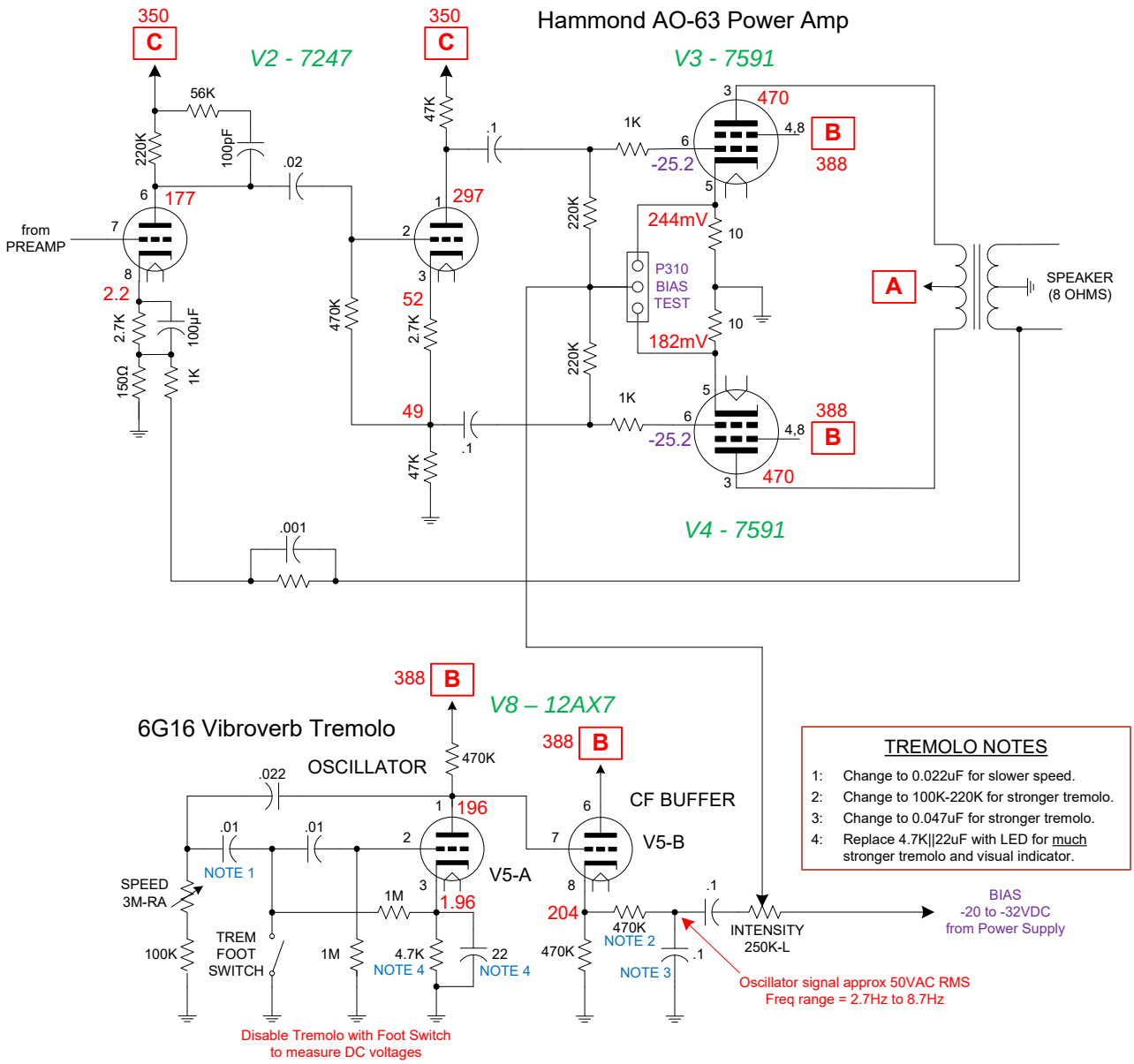
Hammond AO-63 Power Amp
V2 - 7247
V3 - 7591
V4 - 7591
V8 – 12AX7
350
C
B
388
A
from PREAMP
SPEAKER (8 OHMS)
P310 BIAS TEST
244mV
182mV
-25.2
470
177
297
52
49
2.2
6G16 Vibroverb Tremolo
OSCILLATOR
CF BUFFER
V5-A
V5-B
196
1.96
204
SPEED 3M-RA
TREM FOOT SWITCH
NOTE 1
NOTE 2
NOTE 3
NOTE 4
INTENSITY 250K-L
BIAS -20 to -32VDC from Power Supply
Oscillator signal approx 50VAC RMS
Freq range = 2.7Hz to 8.7Hz
Disable Tremolo with Foot Switch to measure DC voltages
TREMOLO NOTES
1: Change to 0.022uF for slower speed.
2: Change to 100K-220K for stronger tremolo.
3: Change to 0.047uF for stronger tremolo.
4: Replace 4.7K||22uF with LED for much stronger tremolo and visual indicator.

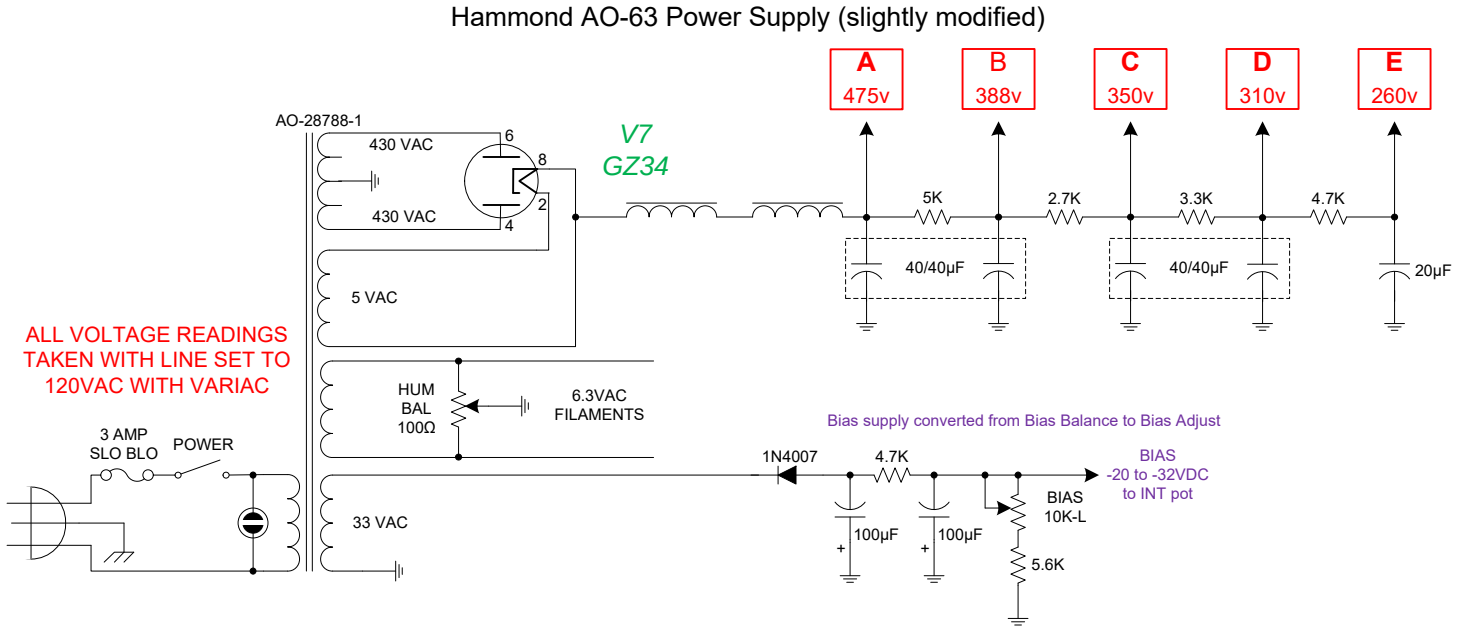
Hammond AO-63 Power Supply (slightly modified)
A 475v
B 388v
C 350v
D 310v
E 260v
AO-28788-1
430 VAC
430 VAC
5 VAC
V7 GZ34
5K
2.7K
3.3K
4.7K
40/40µF
40/40µF
20µF
ALL VOLTAGE READINGS TAKEN WITH LINE SET TO 120VAC WITH VARIAC
3 AMP SLO BLO
POWER
HUM BAL 100Ω
6.3VAC FILAMENTS
33 VAC
Bias supply converted from Bias Balance to Bias Adjust
1N4007
4.7K
BIAS -20 to -32VDC to INT pot
BIAS 10K-L
100µF
100µF
5.6K