FENDER MODEL "PRINCETON REVERB-AMP AA1164" SCHEMATIC

THIS PRODUCT MANUFACTURED UNDER ONE OR MORE OF THE FOLLOWING U.S. PATENTS: #2817708, 2973681, 192859 / PATENTS PENDING.

K-FD

NOTICE

1. VOLTAGES READ TO GROUND WITH ELECTRONIC VOLTMETER. VALUES SHOWN + OR - 20%
2. ALL RESISTORS 1/2 WATT 10% TOLERANCE IF NOT SPECIFIED.
3. ALL CAPACITORS AT LEAST 400 VOLT RATING IF NOT SPECIFIED.

INSTRUMENTS

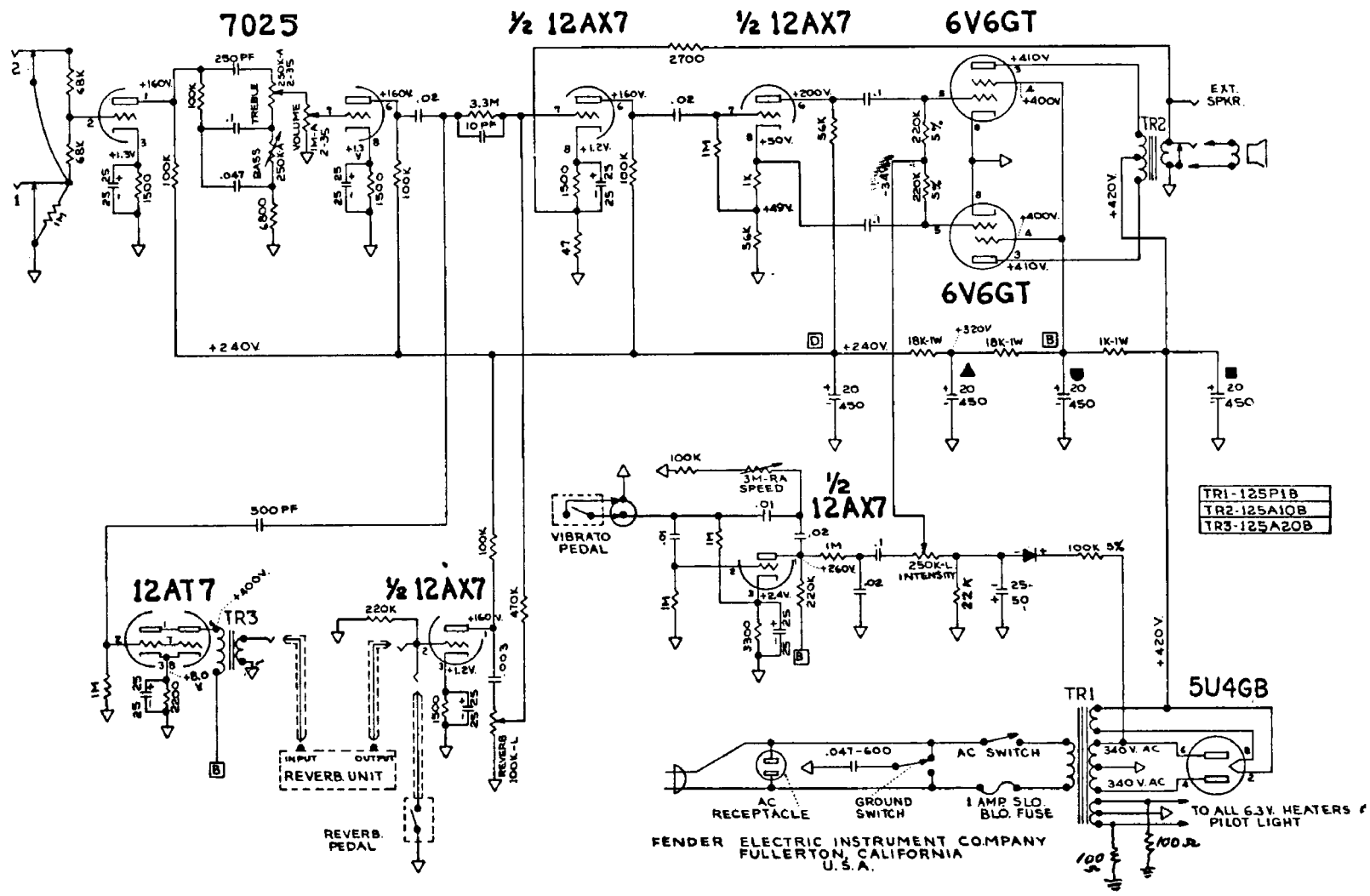

FENDER MUSICAL INSTRUMENTS
CBS MUSICAL INSTRUMENTS
A DIVISION OF COLUMBIA BROADCASTING SYSTEMS INC.
FULLERTON CALIFORNIA
U.S.A.

DWG. TITLE			
SCHEMATIC & WIRING DIAGRAM AA1164 PRINCETON REVERB AMP			
REL. NO.	SIZE	DWG NO.	REV
571	D	045427	A
SCALE	MODEL PRINCETON REV. AMP TUBE TYPE	SHEET 1 OF 2	