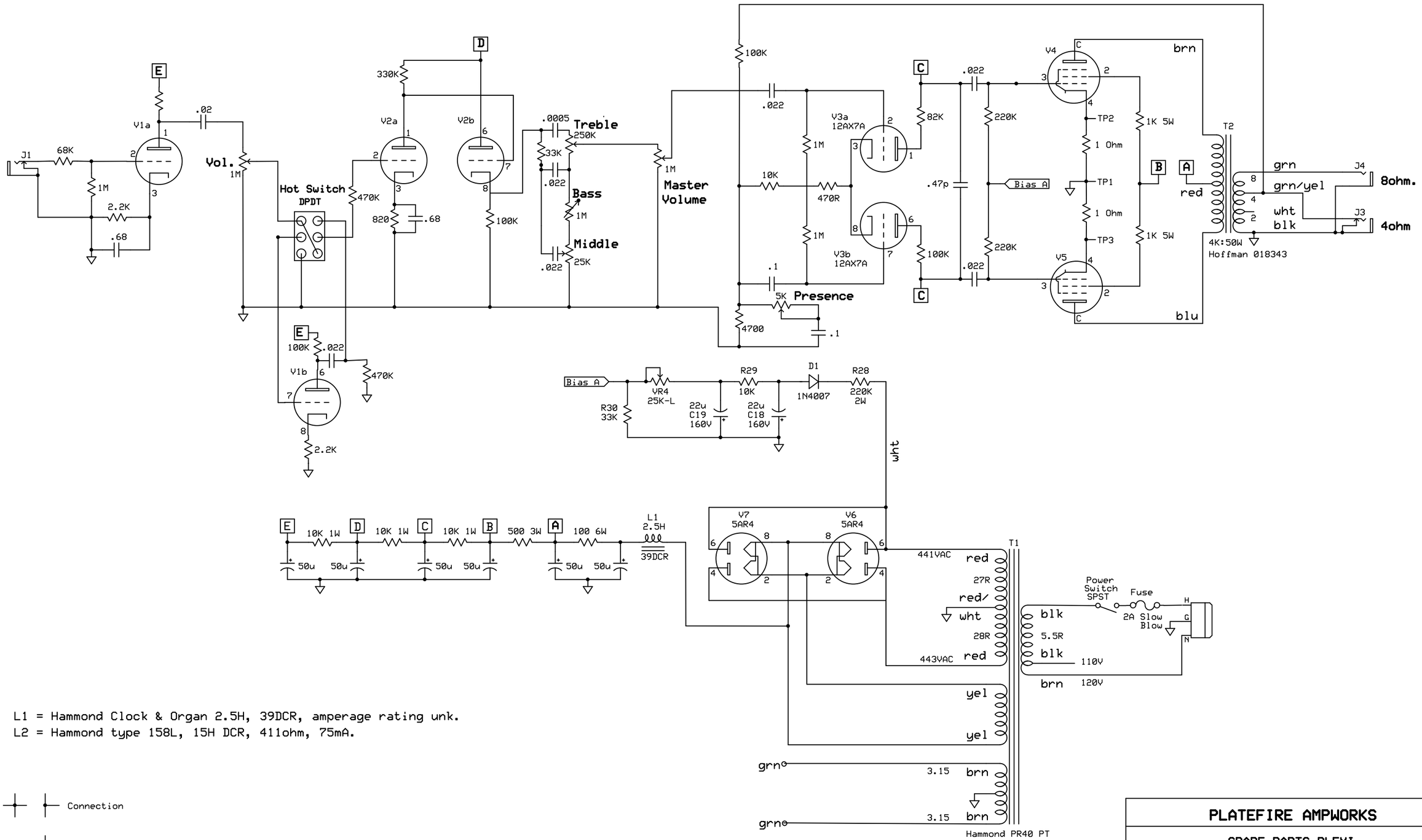

L1 = Hammond Clock & Organ 2.5H, 39DCR, amperage rating unk.
L2 = Hammond type 158L, 15H DCR, 411ohm, 75mA.

Connection

No Connection

PLATEFIRE AMPWORKS		
SPARE PARTS PLEXI		
P. Mitcheltree R. Scott	29 Dec 2015	Page 1