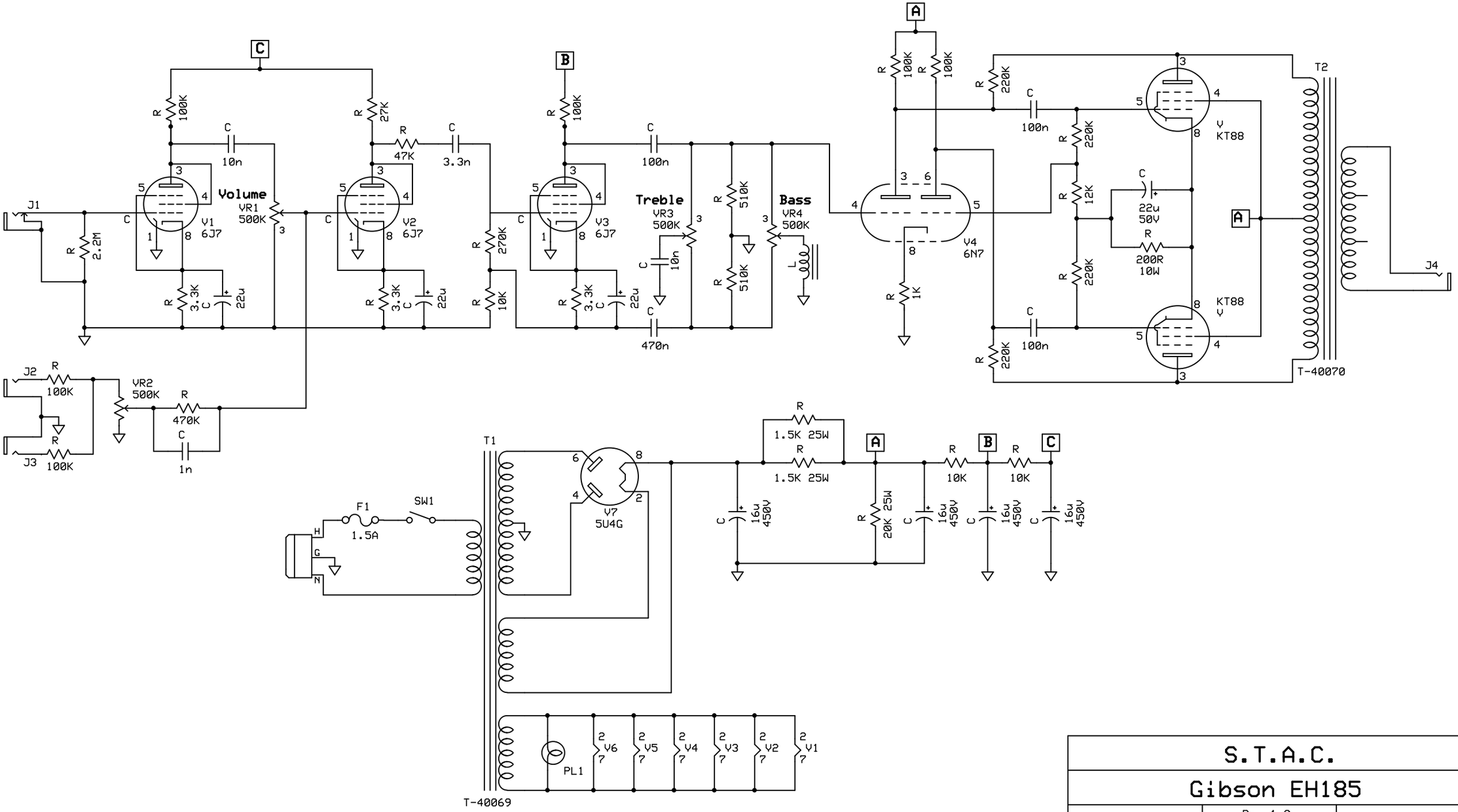

S.T.A.C.		
Gibson EH185		
P. Mitcheltree	Rev 1.0 1/28/2016	Reproduction