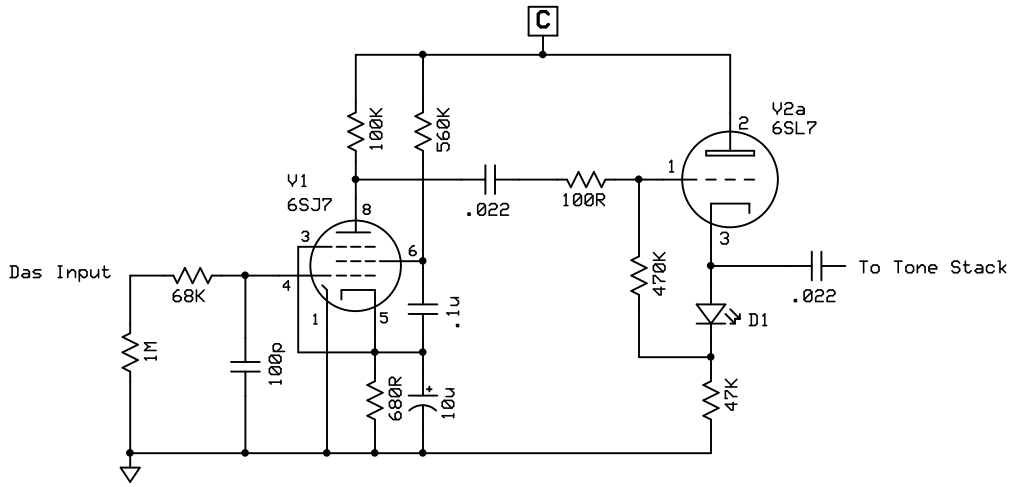

Kagliostro Nostro		
K's 5C1 that's not so 5C1		
K-man	Rev 1.0 2/13/2016	Page 1