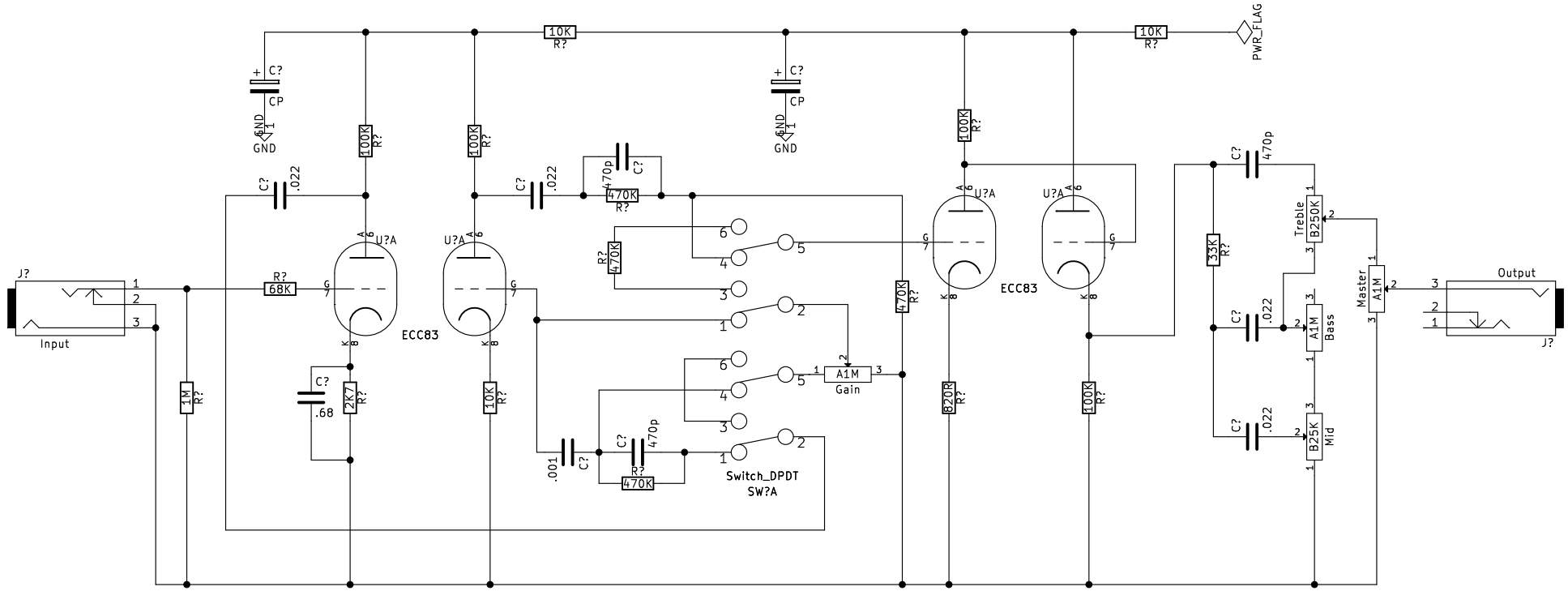

Sheet: /
File: guitar pre.sch

Title:

Size: A4	Date:	**Rev:**
KiCad E.D.A. kicad 4.0.0-rc2-1-stable		Id: 1/1