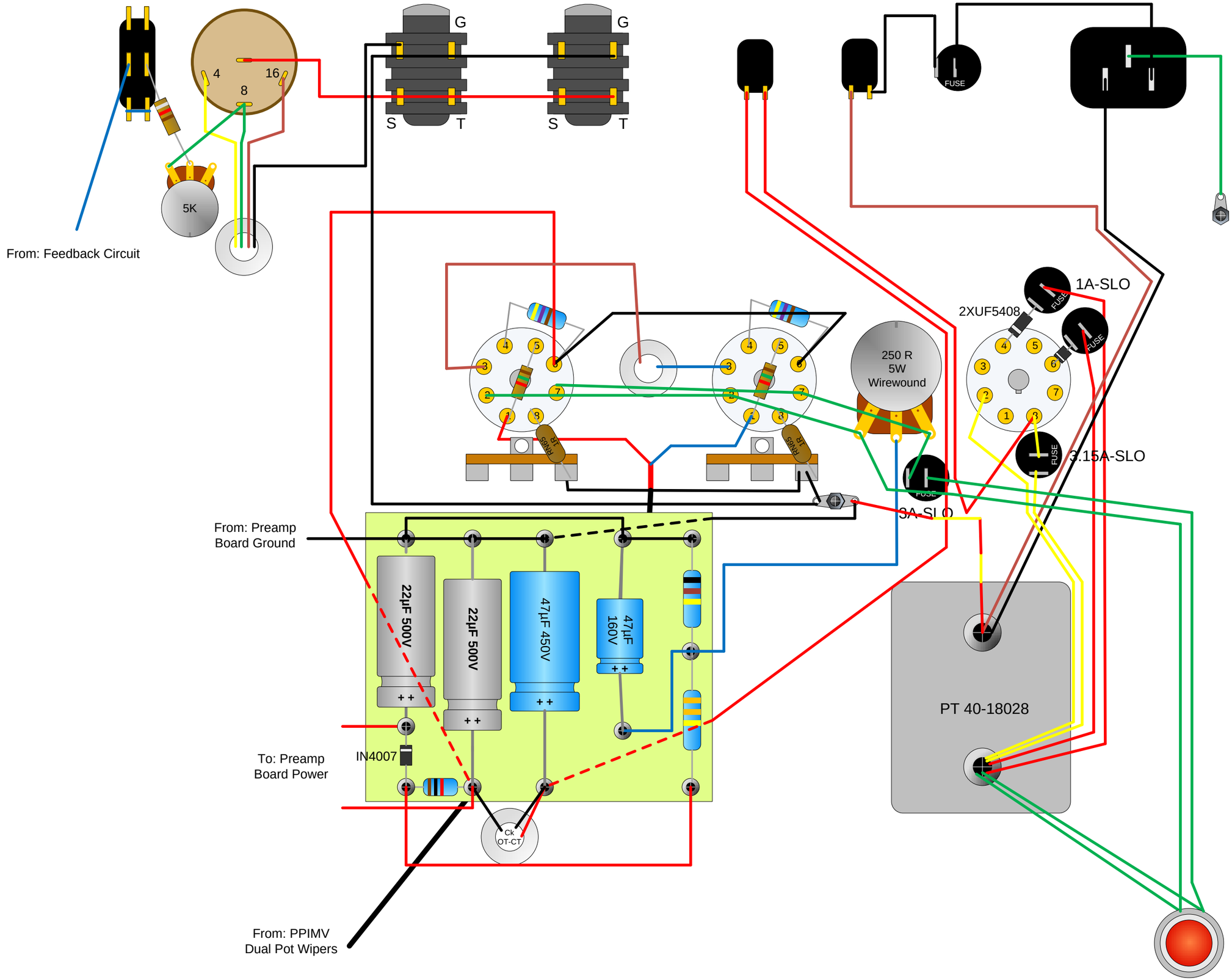
From: Feedback Circuit
4
8
16
5K
G
S
T
G
S
T
FUSE
1A-SLO
2XUF5408
250 R
5W
Wirewound
3.15A-SLO
3A-SLO
From: Preamp
Board Ground
22µF 500V
22µF 500V
47µF 450V
47µF
160V
PT 40-18028
To: Preamp
Board Power
IN4007
Ck
OT-CT
From: PPIMV
Dual Pot Wipers