Tonebox v2

Prototype – untested!
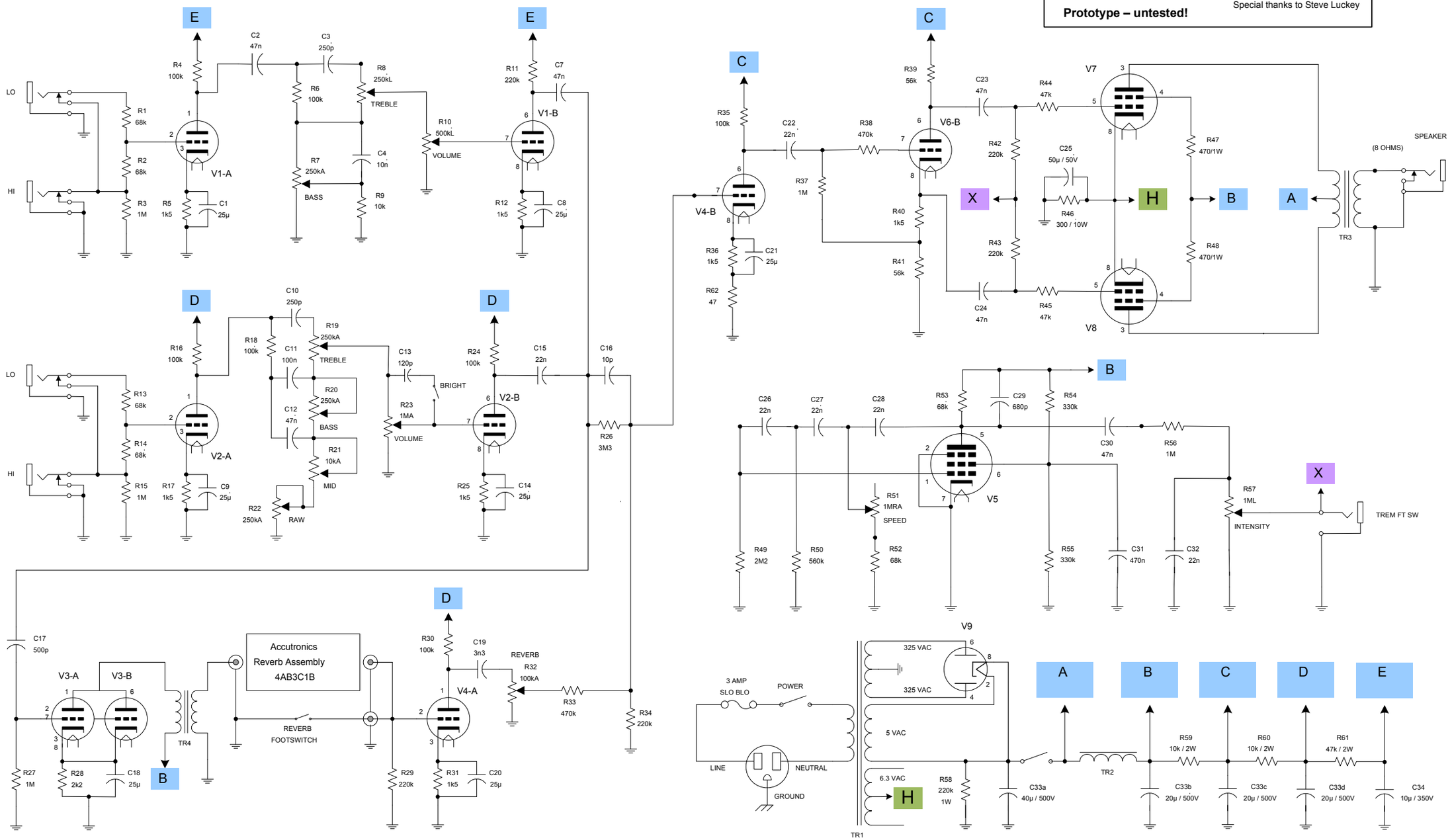
Notes - C5, C6 removed
Special thanks to Steve Luckey