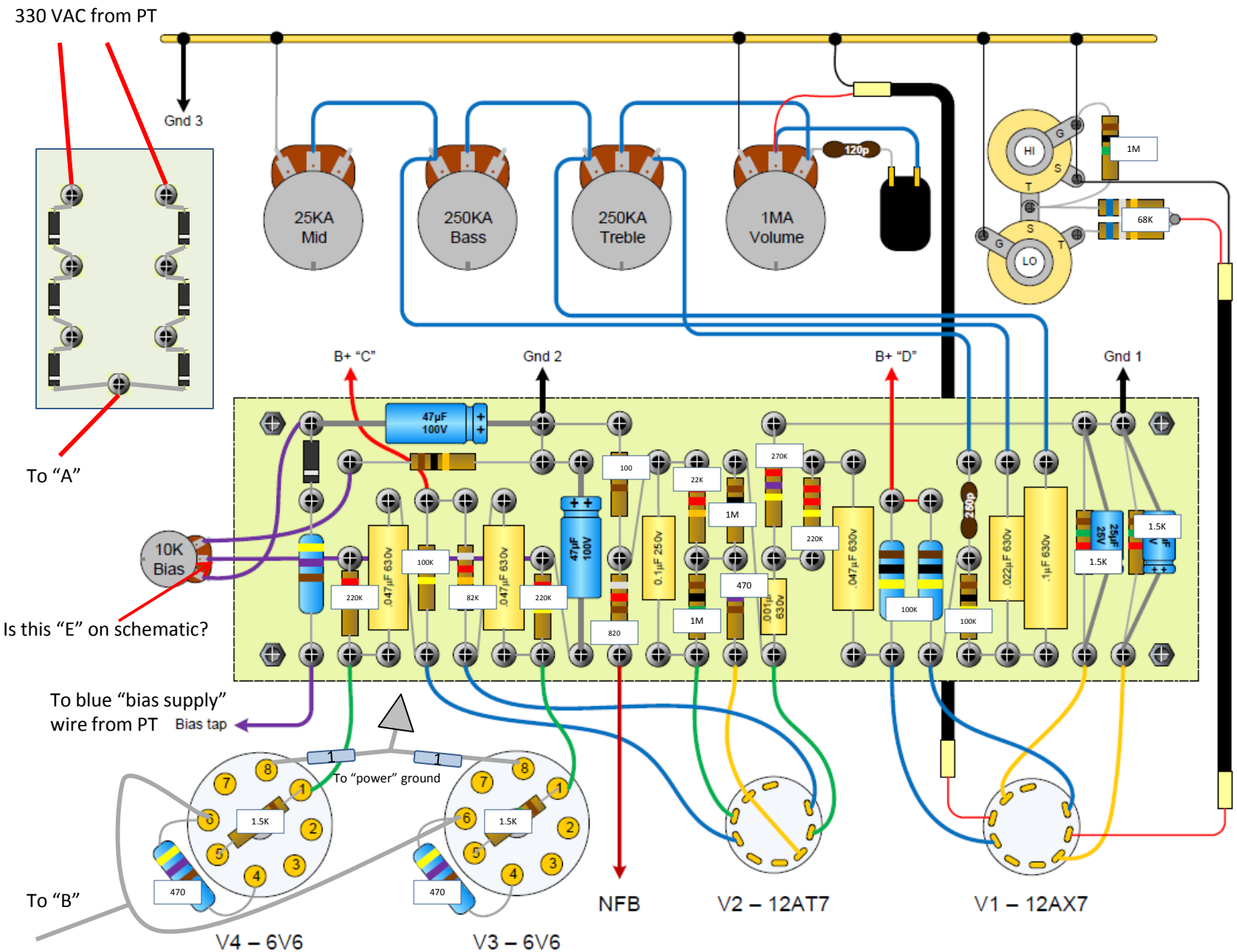
330 VAC from PT
Gnd 3
25KA
Mid
250KA
Bass
250KA
Treble
1MA
Volume
120p
HI
LO
1M
68K
B+ "C"
Gnd 2
B+ "D"
Gnd 1
47µF
100V
10K
Bias
To "A"
Is this "E" on schematic?
To blue "bias supply"
wire from PT
Bias tap
To "power" ground
To "B"
NFB
V4 – 6V6
V3 – 6V6
V2 – 12AT7
V1 – 12AX7