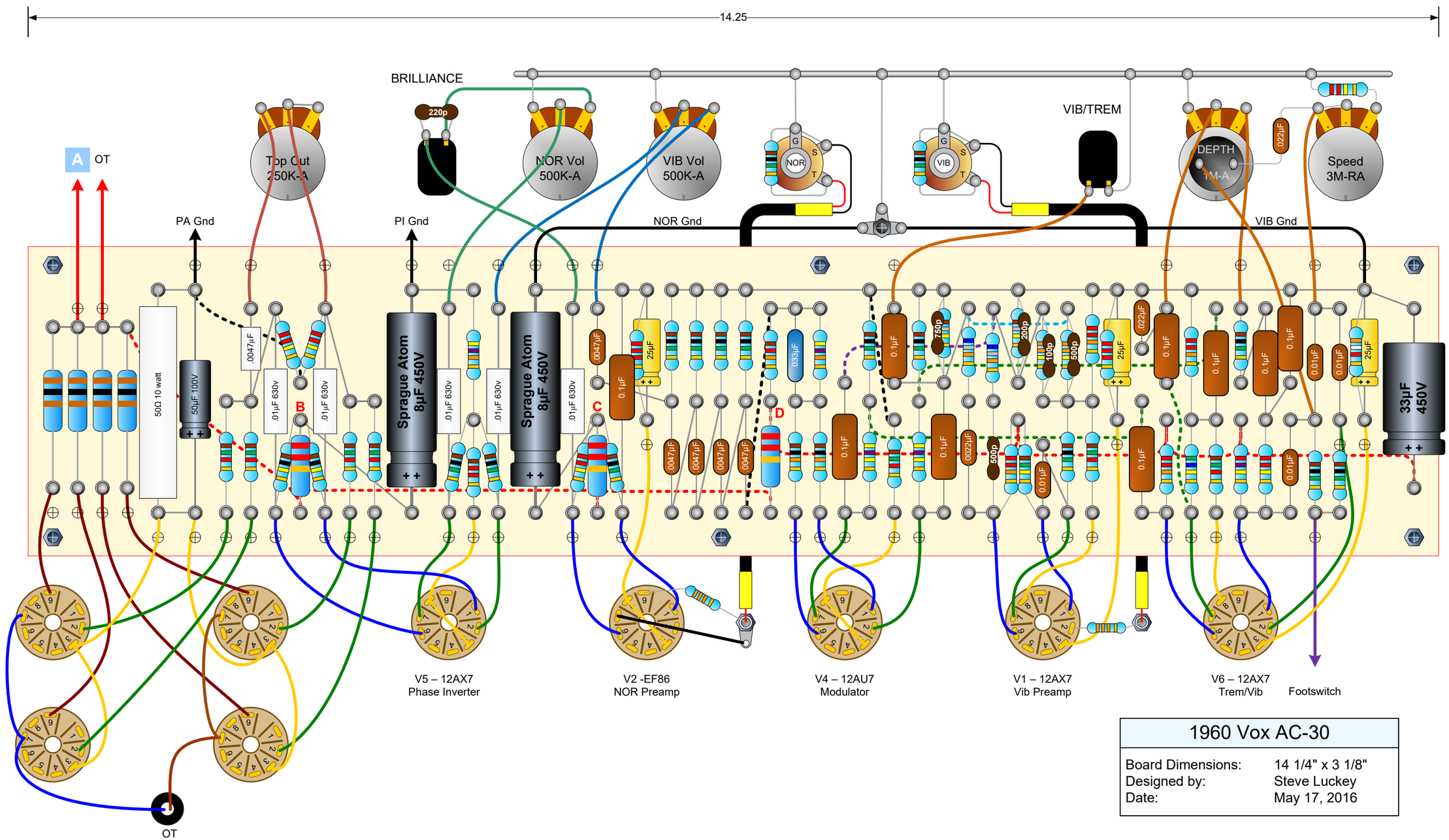

1960 Vox AC-30	
Board Dimensions:	14 1/4" x 3 1/8"
Designed by:	Steve Luckey
Date:	May 17, 2016

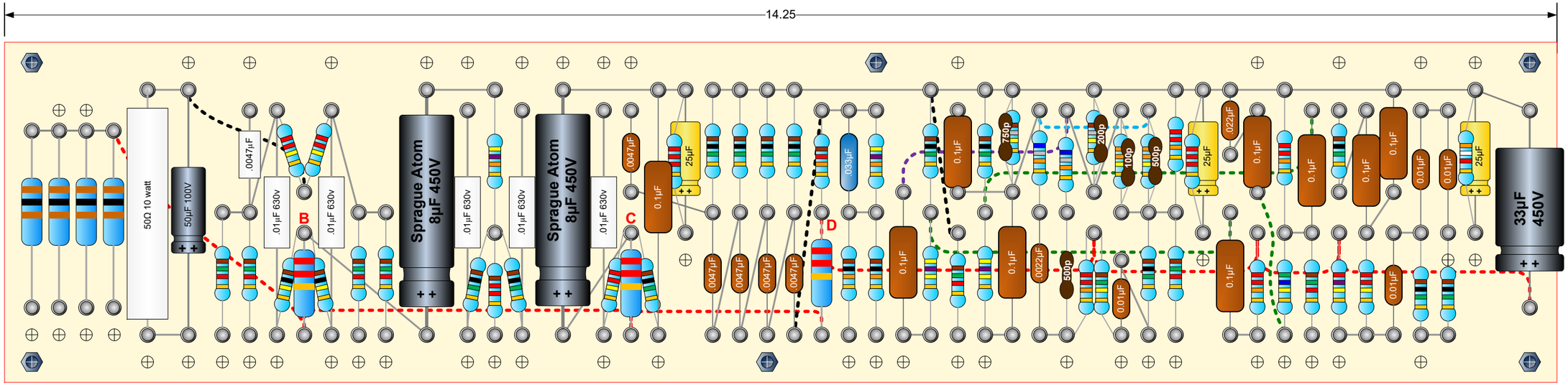
14.25
50Ω 10 watt
50µF 100V
.0047µF
.01µF 630v
B
.01µF 630v
Sprague Atom
8µF 450V
.01µF 630v
.01µF 630v
Sprague Atom
8µF 450V
.01µF 630v
.0047µF
C
0.1µF
25µF
.0047µF
.0047µF
.0047µF
.0047µF
D
.033µF
0.1µF
0.1µF
750p
.0022µF
500p
200p
100p
500p
0.01µF
25µF
.022µF
0.1µF
0.1µF
0.1µF
0.1µF
0.01µF
0.01µF
0.01µF
25µF
33µF
450V

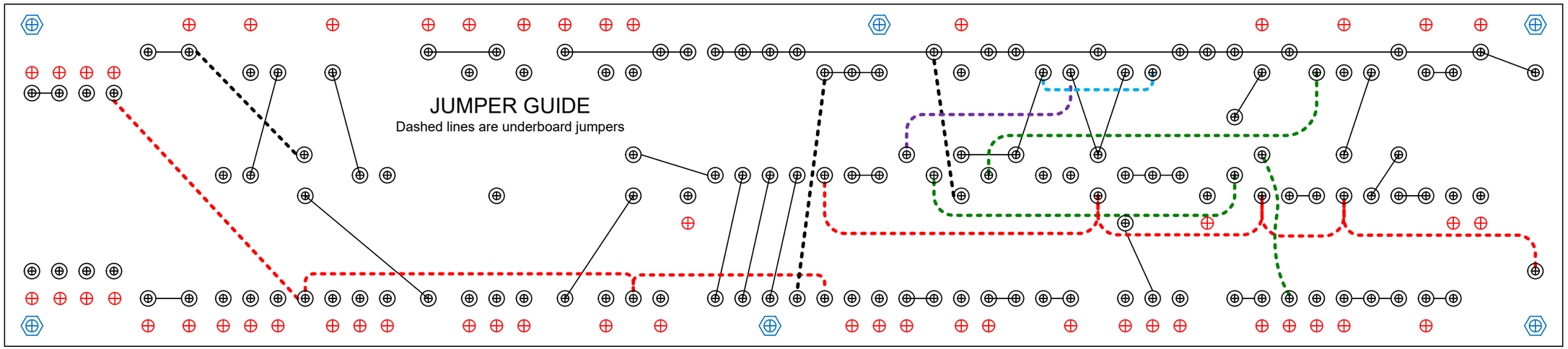
JUMPER GUIDE
Dashed lines are underboard jumpers

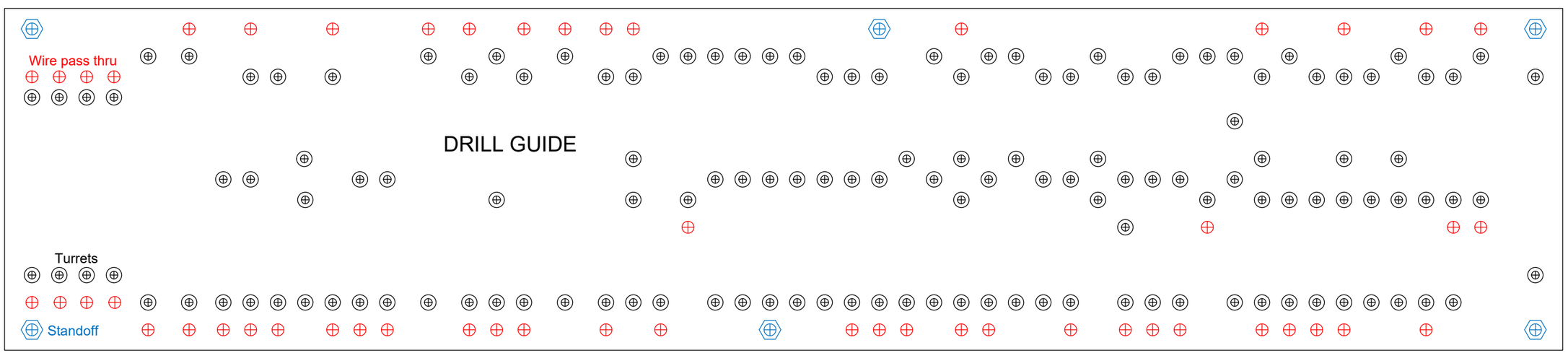
Wire pass thru
DRILL GUIDE
Turrets
Standoff