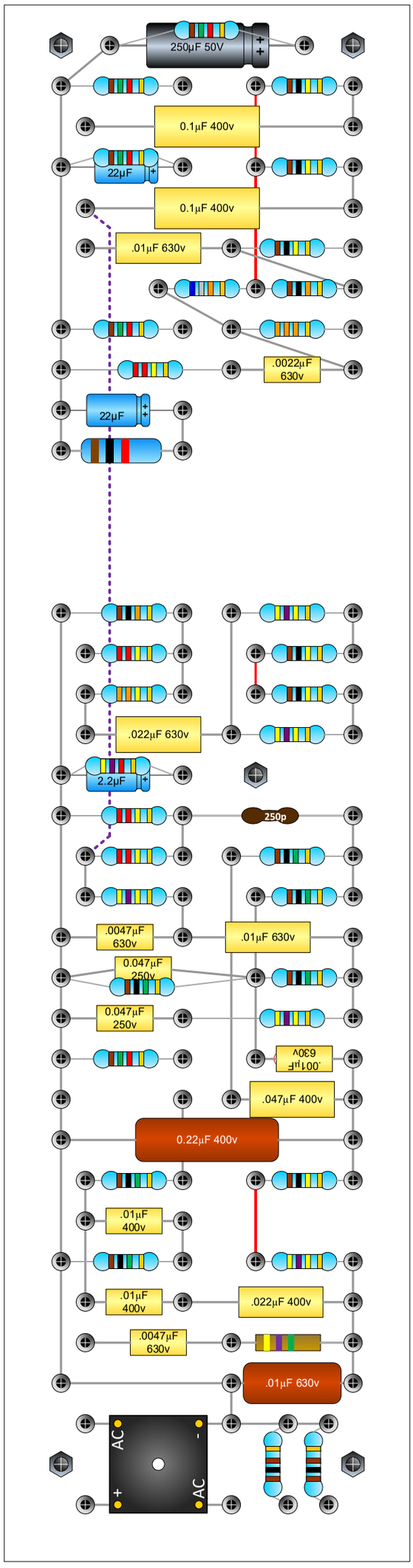
250µF 50V
0.1µF 400v
22µF
0.1µF 400v
.01µF 630v
.0022µF 630v
22µF
.022µF 630v
2.2µF
250p
.0047µF 630v
.01µF 630v
0.047µF 250v
0.047µF 250v
.001µF 630v
.047µF 400v
0.22µF 400v
.01µF 400v
.01µF 400v
.022µF 400v
.0047µF 630v
.01µF 630v
AC
AC

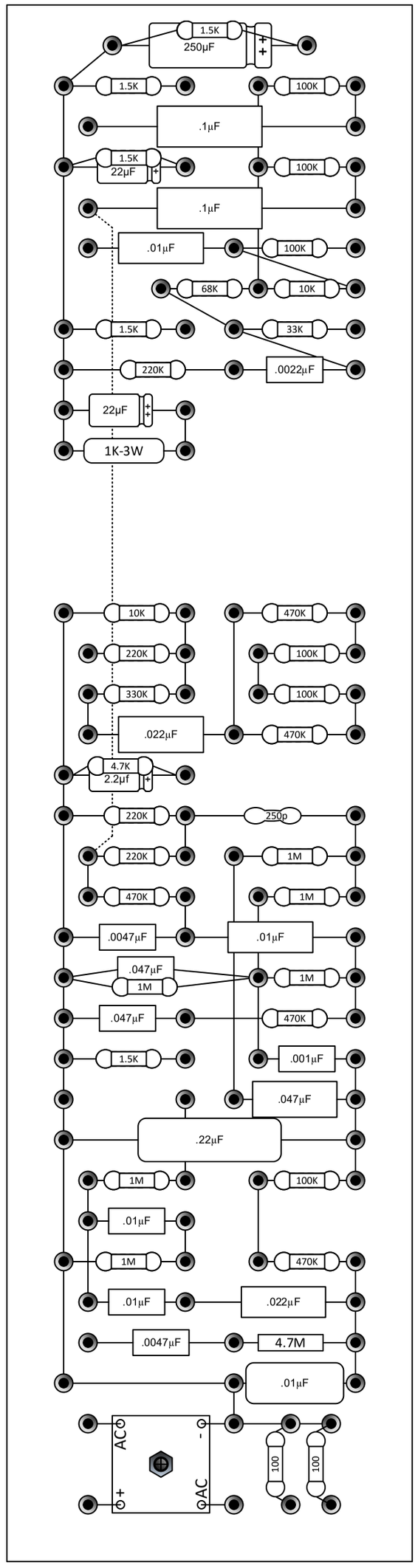
1.5K
250µF
1.5K
100K
.1µF
1.5K
22µF
100K
.1µF
.01µF
100K
68K
10K
1.5K
33K
220K
.0022µF
22µF
1K-3W
10K
470K
220K
100K
330K
100K
.022µF
470K
4.7K
2.2µf
220K
250p
220K
1M
470K
1M
.0047µF
.01µF
.047µF
1M
1M
.047µF
470K
1.5K
.001µF
.047µF
.22µF
1M
100K
.01µF
1M
470K
.01µF
.022µF
.0047µF
4.7M
.01µF
AC
AC
100
100