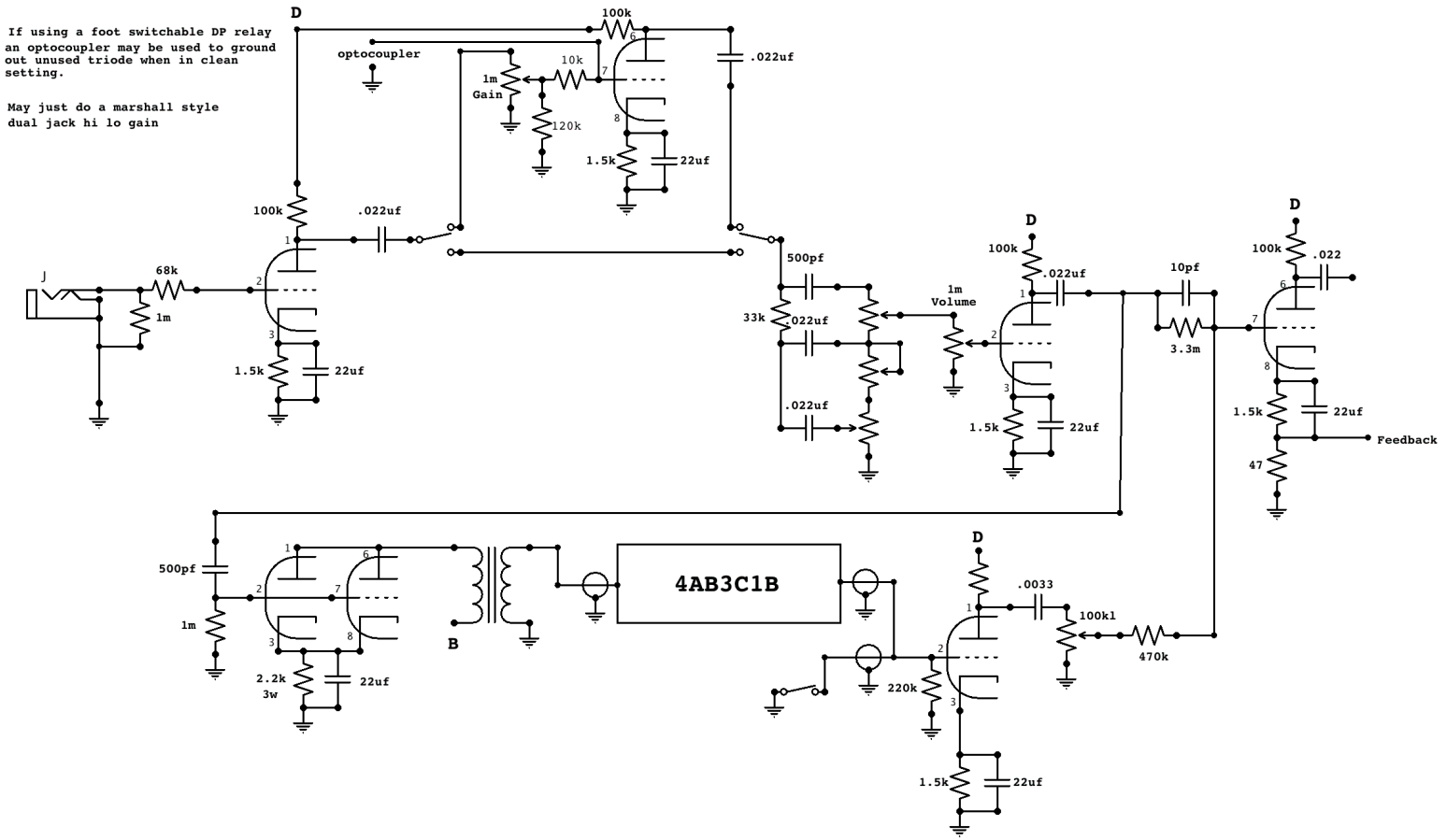

Company Name		
Schematic Name		
coreyblythe	Rev 1.0 2016-10-22	Page #